中美清洁能源联合研究中心
Clean Energy Research Center

清洁煤技术(包括碳捕集和封存)联盟
Advanced Coal Technologies Consortium

2011 年度总结报告

Annual Report 2011

2012.2

目　录

Content

一、概述 ····· 1

Introduction ····· 1

二、联盟进展 ····· 3

Consortium Progress ····· 3

1．联盟组织机构的完善 ····· 3

Establishment of Consortium Organizational Structure ····· 3

2．合作计划 ····· 5

Cooperation Plan ····· 5

3．签署技术管理计划（TMP） ····· 9

Signing Technical Management Plan (TMP) ····· 9

4．研究内容 ····· 12

Research Activities ····· 12

5．研究进展 ····· 31

Research Progress ····· 31

三、合作亮点 ····· 57

Highlight Achievements ····· 57

四、下年度计划 ····· 67

Plan of Next Year ····· 67

附录 1：课题工作对接计划 ····· 70

Annex 1: Cooperation Plan ····· 70

附录 2：技术管理协议 ····· 150

Annex 2: Technical Management Plan ····· 150

一、概述 Introduction

2011 年 1 月 18 日，胡锦涛主席对美国事访问期间，在中国科技部部长万刚，中国国家能源局局长张国宝和美国能源部部长朱棣文的共同主持下，举行了中美清洁能源联合研究中心授牌和工作框架协议签字仪式。

On Janurary 18th, when Chinese President Hu Jintao visited USA, the signing ceremony of the frame work agreement of the Sino-US Clean Energy Research Center (CERC) is co-moderated by Chinese Minister of Science and Technology, Chinese National Energy Administrator Zhang Guobao, and the U.S. Secretary of Energy Steven Chu.

在三个清洁能源联合研究中心项目中，清洁煤技术（包括碳捕集和封存）项目涉及煤炭清洁利用和二氧化碳捕集、利用与封存。中美两国的煤炭资源相对丰富，在其能源系统中广泛应用，也是保证其经济增长的核心助力，这对于两国环境保护、温室气体减排和相关产业发展既是挑战，又是机遇。

Within the three current CERC programs, the Clean Coal including CCS program addresses technology and practices for clean coal utilization and carbon capture, utilization, and storage. Abundant coal resources and widespread use are central to the energy systems and growth aspirations of both countries and present both challenges and opportunities for our two countries in environmental performance and commercial development.

中美两国分别选择“华中科技大学”和“西弗吉尼亚大学”领导各自研究团队，分别组成中、美两国清洁煤技术联盟。两个联盟（统称清洁能源联合研究中心清洁煤技术联盟，CERC-ACTC）将实施一项为期五年的工作计划，以大力促进中美两国在清洁煤(包括碳捕集、利用和封存)领域的技术进步。中美清洁能源联合研究中心清洁煤技术联盟的宗旨是提高两国煤炭清洁、高效利用技术（包括碳捕集、封存和利用）。所有中美清洁能源联合研究中心清洁煤技术联盟的中方成员单位如表 1 所示。

The United States and China have chosen West Virginia University (WVU) and Huazhong University of Science and Technology (HUST) to lead teams of experts

from public and private institutions. These teams are designated as the China Advanced Coal Technology Consortium and the US Advanced Coal Technology Consortium (the China ACTC and US ACTC, respectively). These two Advanced Coal Technology Consortia (collectively the CERC-ACTC) will implement a five-year work plan to help significantly advance technology in the area of clean coal including carbon capture, utilization, and storage in both China and the US. The US-China CERC-ACTC advances the coal technology needed to safely, effectively, and efficiently utilize coal resources including the ability to capture, store, and utilize emissions from coal use in both nations. The institutions of CERC-ACTC of China are listed in Table 1.

表 1 中美清洁能源联合研究中心清洁煤技术联盟中方成员

联盟主任：郑楚光 博士，华中科技大学 首席工程师：许世森博士，中国华能集团清洁能源技术研究院		
首席科学家：姚强 博士，清华大学		
研究院所	高校	企业
中国华能集团清洁能源技术研究院	华中科技大学	华能集团
中国科学院能源动力研究中心	清华大学	神华集团
中国科学院武汉岩土力学研究所	浙江大学	新奥集团
	中国矿业大学	中国电力投资集团公司
	上海交通大学	中国电力工程顾问集团公司
	哈尔滨工业大学	陕西延长石油（集团）有限责任公司
	西北大学	

Table 1: The China-ACTC CERC team

Consortium Director: Dr. Zheng Chuguang, Huazhong University of Science and Technology Chief Engineer: Dr. Xu Shisen, Huaneng Clean Energy Research Institute		
Chief Scientist: Yao Qiang		
Research Institutions	**Universities**	**China Companies**
Huaneng Clean Energy Research Institute	Huazhong U. of Science and Technology	China Huaneng Group
Research Center for Clean Energy and Power, Chinese Academy of Sciences	Tsinghua U.	Shenhua Group
Institute of Rock and Soil Mechanics, Chinese Academy of Science	Zhejiang U.	ENN
	China U. of Mining and Technology	China Power Investment Corp. Group
	Shanghai Jiao Tong U.	China Power Engineering Consulting Corp.
	Harbin Institute of Technology	Shaanxi Yanchang Petroleum (Group) Co., LTD.
	Northwest U.	

二、联盟进展

Consortium Progress

1．组织机构的完善

Establishment of Consortium Organizational Structure

表 2　ACTC 各任务负责人及合作伙伴

序号	名称	中/美方负责人	中方参加单位	美方参加单位
1	清洁发电	姚强/待定	清华大学，上海交通大学，哈尔滨工业大学，中科院能源动力中心，华能集团，中国电力投资集团公司，中国电力顾问公司，神华集团	待定
2	清洁转化	骆仲泱/Ismail Celik	浙江大学，神华集团，新奥集团，中科院能源动力中心，中国矿业大学	西弗吉尼亚大学，阿米那能源公司
3	燃前捕获	许世森/Kunlei Liu	华能集团，清华大学，中科院能源动力中心,中国电力投资集团公司	杜克能源, GE，劳伦斯利弗莫尔国家实验室，西弗吉尼亚大学
4	燃后捕获	郜时旺/Kunlei Liu	华能集团，清华大学，西北大学，中国电力顾问公司，中国电力投资集团公司，浙江大学，中国矿业大学	肯塔基大学，怀俄明大学，洛斯阿拉莫斯国家实验室，　美国国家能源技术实验室
5	富氧燃烧	柳朝晖/Kevin McCauley	华中科技大学，清华大学，中国电力顾问公司，哈尔滨工业大学	巴威公司，西弗吉尼亚大学，劳伦斯利弗莫尔国家实验室，美国国家能源技术实验室
6	CO_2 封存	李小春 任相坤/Tim Carr, R. Surdam, Phil Stauffer, Walt McNab	神华集团，中科院岩土所，清华大学，中国矿业大学，陕西能源研究院，陕西延长石油有限责任公司	怀俄明大学，洛斯阿拉莫斯国家实验室，劳伦斯利弗莫尔国家实验室，印第安纳地质调查局
7	CO_2 利用	朱振旗/Mark Crocker	新奥集团，浙江大学	肯塔基大学，杜克能源 美国国家能源技术实验室
8	模拟和评估	李政/Richard Turton	清华大学，神华集团，中国电力顾问公司，华能集团，华中科技大学，中科院能源动力中心，新奥集团	美国国家能源技术实验室，劳伦斯利弗莫尔国家实验室，杜克能源
9	交流与综合	邬田华/Sarah Forbes	华中科技大学，清华大学，华能集团	世界资源研究所，西弗吉尼亚大学，中美清洁能源论坛

Table 2 ACTC Tasks and Cooperation Partners

No	Tasks	China/US Leaders	China Institutions	US Institutions
1	Advanced Power Generation	Yao Qiang/ TBD	THU, SJTU, HIT, , CHNG-CERI, CPIC, CPECC, Shenhua	TBD
2	Clean Coal Conversion Technology	Luo Zhongyang/ Ismail Celik	ZJU, Shenhua, ENN, CEP-CAS, CUMT	West Virgina University, LP Amina
3	Pre-combus. Capture	Xu Shisen/ Kunlei Liu	CHNG-CERI, THU, CPIC, CEP-CAS	Duke Energy, GE LLNL, West Virginia University
4	Post-combus. Capture	Gao Shiwang/ Kunlei Liu	CHNG-CERI, THU, NWU, CPECC, CPIC, ZJU, CUMT	UK-CAER University of Wyoming, LANL, LLNL
5	Oxy-Combustion Capture	Liu Zhaohui/ Kevin McCauley	HUST, THU, CPECC, HIT	B&W PGG, WVU, LLNL, NETL
6	CO_2 Sequestration	Li Xiaochun, Ren Xiangkun/ Tim Carr, R. Surdam, Phil Stauffer, Walt McNab	Shenhua, IRSM-CAS, THU, CUMT, NWU, Yanchang Petroleum	University of Wyoming, LANL, LLNL, Indiana Geological Survey
7	CO_2 Utilization	Zhu Zhenqi/ Mark Crocker	ENN, ZJU	University of Kentucky Duke Energy NETL
8	Simulation and Assessment	Li Zheng/ Richard Turton	THU, Shenhua, CPECC, CUMT, NWU, CHNG-CERI, HUST, CEP-CAS, ENN	NETL LLNL Duke
9	Communication and Integration	Wu Tianhua/ Sarah Forbes	HUST, THU, CHNG-CERI	WRI WVU CEF

清洁煤技术联盟建立后，为有效开展联盟工作，联盟成立了以郑楚光教授、姚强教授和许世森博士为核心的 3 人领导小组，在此基础上还确定了其他 8 名课题任务负责人，加上三人领导小组，组成了 11 人总体组领导成员，使各任务都有专人负责，保证联盟工作的顺利进行。各任务负责人及合作伙伴如表 2 所示。

With the set up of ACTC, its leader group of three people is also established, based on which an Advisory Board of eleven people is formed so that each task is taken charge by one or two of them. This guarantees the progress of each ACTC task. The tasks and their leaders are shown in Table 2.

2．合作计划

Cooperation Plan

2011 年 3 月 1 日至 3 月 2 日，第二次中美清洁能源联合研究中心清洁煤技术联盟（CERC-ACTC）双边联席会议在北京清华大学举行。在本次会议上，中美两国与会代表分别介绍了各自工作基础、整体工作方案、合作的前期准备工作、各研究任务的对接情况及存在的主要问题，并按项目或任务进行了分组讨论，交流了双方的研究内容和目标，就合作的方式和内容，存在的挑战和机遇进行了充分探讨。我方着重介绍了中方政府、企业、机构在 CCS 的项目投入、研究开发和工程示范的各个方面所开展的突出工作及成果，形成了中美双方各具优势，强强合作的共识，体现了研发对等互利的原则。

The Second CERC-ACTC Joint Meeting was held at Tsinghua University, Beijing from March 1st to 2nd, 2011。 During the meeting, delegates from both countries introduced their work foundations, work plans, pre-cooperation preparations, cooperation situations, and the main exiting problems. Group discussions were also arranged according to the tasks, in which the research work and objectives were discussed, as well as the possible cooperation forms, plans, opportunities and challenges. Delegates from China emphasized the input to the CCS project from the central government, industries and organizations, and introduced the prominent work and results in R&D and engineering demonstrations which resulted a common understanding that both of the two sides of CERC possess predominance and the cooperation is based on strong-strong and equivalence principles.

表 3　ACTC 各任务合作研究目标及工作内容

序号	名称	研究目标	研究任务
1	清洁发电	通过高效合作，突破洁净煤发电与利用关键技术	整体煤气化联合循环发电(IGCC)技术；百万千瓦和超700℃高参数超超临界发电技术；现役电站提高效率和减排技术等。
2	清洁转化	完成煤热解气化燃烧多联产等关键技术研究，并进行工业示范	煤炭热解气化燃烧分级转化、液化残渣气化、化学链气化、催化气化、超临界水解气化、生物质共转化及水煤浆燃料等方面的研究与开发，部分技术实现在中美两国的工业示范与应用。
3	燃前捕获	建立基于 IGCC 燃烧前 CO_2 捕集和封存中试系统	开发 IGCC 系统优化和模块化设计技术；掌握基于 IGCC 燃烧前 CO_2 捕集和封存关键技术；研发适合燃烧前捕集的 CO_2 吸收剂；提高 IGCC 及近零排放发电系统的供电效率和可靠性，降低建设成本，使该技术在中美两国具有商业化推广的基础。
4	燃后捕获	大规模燃烧后 CO2 捕集、利用与封存技术	研发具有工程实用性的高效 CO_2 吸收剂，获得大规模燃烧后 CO_2 捕集系统运行优化方案，完成 100 万吨/年 CO_2 捕集技术方案和技术经济可行性研究，具备优化和工程设计能力。
5	富氧燃烧	合作推动富氧燃烧的新原理及关键装备研发	富氧燃烧技术的煤种适应性、小型和中试系统运行性能评估及优化、全流程稳态和动态过程的建模与仿真优化等方面的研究，完善富氧燃烧技术的设计和运行策略。
6	CO_2 封存	揭示 CO_2 地质封存规律、完善运移模拟技术、提出大规模封存方案	掌握和开发 CO_2 地质封存的潜力评价技术、安全和风险评估技术、模拟技术与监测技术，为中国大规模开展 CCS 碳减排提供技术积累和支撑。
7	CO_2 利用	合作建立火力发电厂微藻生物减排产业化示范基地	选配藻种，通过诱变和转基因改良藻种，培养工艺优化，后处理技术，CO2 微藻生物封存对中美及全球社会经济影响
8	模拟和评估	各种二氧化碳捕集、封存技术的横向比较和综合	建立 CCS 整体系统设计、性能预测和动态仿真的技术能力，以及封闭后管理的方法建议。
9	交流与综合	知识产权和信息共享的高效管理	合作中将伴随的知识产权管理、信息(包括知识、数据等)共享、研究交流等；双方的研究工作综合和简报；保障合作双方的充分交流。

Table 3 ACTC Task Objectives and Activities

No	Tasks	Objectives	Activities
1	Advanced Power Generation	Break through in clean coal generation and application key technology	IGCC technology, GW scale over 700℃ ultra-supercritical power plant, technology of increasing efficiency and reducing emission.
2	Clean Coal Conversion Technology	Finish the research on technology of co-generation system with combined pyrolysis, gasification, and combustion. Demonstrated successfully at industrial scale.	Co-generation system combined pyrolysis, gasification, and combustion; Chemical Looping Gasification with CO2 Capture; Direct SNG production from coal; Coal to SNG by Catalytic gasification; Supercritical water catalytic gasification for low grade fuel; Coal/biomass co-conversion process; Coal water slurry (CWS) and its utilization; industrial demonstration.
3	Pre-combus. Capture	Establish pilot systems of pre-combustion CO2 capture and sequestration.	Development of Techniques for Integration and Optimization of IGCC system; Development of Key Components in Pre-combustion CO2 Capture Process; Capture Reagent and Process Development and Evaluation; Increase the efficiency and feasibility of near-zero emission power plants.
4	Post-combus. Capture	Technology of large-scale post-combustion CO2 capture, utilization and sequestration.	System Integration and Operation Optimization of Power Generation with Post-Combustion Carbon Capture System (CCS); Feasibility Study of the 1 Million Tons/year Post-combustion CO2 Capture systems; Capture Reagent/sorbents Development and Evaluation
5	Oxy-Combustion Capture	Advance the theory of oxy-fuel combustion and key equipment R&D.	Fuel Characterization and HAPs Emission study Under Oxyfuel Conditions; Pilot-Scale Oxyfuel Combustion Evaluation and Optimization; Steady-State and Dynamic Process Modeling Simulations; Feasibility Study for Large Scale Deployment.
6	CO_2 Sequestration	Find out the fundamentals theory of CO2 geological sequestration and large scale sequestration method.	Geological characterization of demonstration regions for CO_2-ECBM and storage; Investigation on storage theory and migration simulation of supercritical CO_2; Potential and geological suitability evaluations technology of CO_2 saline aquifer storage; Grading and selection of suitable saline aquifer storage sites of demonstration regions. Potential and suitability evaluation methodology for CO_2-EOR of demonstration regions; Field tests of CO_2-EOR pilot project

7	CO_2 Utilization	Establish an industrial demonstration base for power plant micro-algae biologic emission reduction.	Screen the promising microalgae strains best-suited for specific locations, improve the strains by mutagenesis and genetic approaches, and study the CO2 fixation and triacylglycerol production mechanism; Develop high efficient and cost-effective post-processing technologies; Analyze the techno-economics of carbon dioxide utilization process with microalgae and the environmental impacts of microalgae-based biofuels and co-products.
8	Simulation and Assessment	Comparison and integration of different technologies of CO2 capture and sequestration.	Modeling and simulation of coal-fired power plants with CO2 capture; Simulation of IGCC based CO2 capture systems; Assessment of oxy-fuel combustion system and its deployment potential; Potential study of IGCC with CO2 Capture—optimization and integration of new generation IGCC with CO2 Capture; Optimization of steam power systems.
9	Communication and Integration	Effective management of IP and information Share.	IP management in the cooperation; Information (including knowledge and data) sharing and communication. Integration of the work of two sides and produce newsletters.

结合中美方自身的研究特点和项目组织的需要，遵照“对等”原则和“互补双赢”原则，双方确定了清洁发电、清洁转化、燃烧前捕获、燃烧后捕获、富氧燃烧、CO2 地质封存场地评价技术、CO2 资源化利用、系统集成模拟和评价、国际交流与知识产权等九个研究任务。美方在地质封存地点特征及地质封存潜力评估、 二氧化碳注入及其相关过程的地表层及地表层下的模拟、风险评估及危险管理、工业过程的整合与模化、创新捕获技术发展、煤转化和利用、二氧化碳利用与国际综合与交流等方面与中方代表开展了深度的讨论。会议讨论了各任务在今后一年及五年拟进行的合作研究内容，最终形成了各项任务的合作初稿。在其后的广泛交流讨论中，明确了方向，达成了共识，形成了较为完整的工作对接计划（见附件 1），为后来的合作研究奠定了基础。确定的联盟各任务合作研究目标及工作内容见表 3。

Based on the research specialty and requirements of project arrangements, and also according to the principles of equivalence and win-win, nine tasks are determined in ACTC, namely advanced power generation, clean coal conversion technology,

pre-combustion capture, post-combustion capture, oxy-fuel combustion, evaluation technology of CO2 geological storage sites, carbon dioxide utilization with microalgae, systems integration, simulation and assessment, international communication. The one- and five-year cooperation plans were discussed and finally a detailed and complete working plan was formed (see annex 1), which laid a solid foundation for the cooperation. The cooperation objectives and activities for each task are shown in Table 3.

3．签署技术管理计划（TMP）

Technical Management Plan (TMP)

在本年度的工作中，中美知识产权项目组双方共同起草了技术管理计划关于知识产权条款，为中美清洁能源项目的顺利开展铺平道路。《技术管理计划（TMP）》的订立和签署，是中美科技合作项目启动的前提条件，是双方和联盟各个成员之间信息共享和技术交流合作的基础，是知识产权子项目第一阶段的工作重点。在 9 月 23 日北京召开的中美清洁能源联合研究中心指导委员会会议上，美国能源部部长朱棣文指出双方签订技术管理计划（TMP）是联盟工作的标志性进展。肯定了知识产权项目组的工作，其中特别还提及了为清洁煤技术联盟率先签订双方技术管理计划做出重要贡献的我校余翔教授、刘珊老师。

In the year's work, the US-China IP project team drafted together a "Technology Management Plan (Regarding the exploitation of Intellectual Property Rights). It is a prerequisite for starting the project, is a foundation of data sharing and technology exchange of both consortium members, is the keystone of the first phase IP project. In the US-China Clean Energy Research Center Steering Committee meeting held in Beijing on September 23, Secretary Steven Chu of the U.S. DOE point out that the TMP is a landmark work of progress. He commended IP project team’s work progress, especially for Professor YU Xiang and Dr. LIU Shan’s contribution.

中美清洁煤联盟 TMP 的拟定、磋商直至签署，历时半年，其间召开了三次中美双边工作会议，28 个版本的讨论和修订，最终由联盟双方主任郑楚光教授和 Fletcher 教授于 2011 年 8 月 19 日在美国西弗吉尼亚大学签署（TMP 最终文本

见附件 2），并被作为中美清洁能源研究中心的范本，在三大科技合作领域中推广。TMP 的重要条款见表 4。

In US-China CERC-ACTC project, the drafting and negotiation of TMP has been lasted for half a year, in which three bilateral workshop are held, 28 revised version are discussed. The final TMP (see annex 2) was signed by the two directors of ACTC, Professor Chuguang Zheng and Professor Jerald J. Fletcher on August 19th, 2011 at West Virginial University, Morgantown, USA. It was also taken as the model for the other two consortiums, i.e., clean vehicles and building energy efficiency, to follow. The important clauses in the TMP are listed in Table 4.

表 4　TMP 重要条款见

重要问题	条款编号	重要叙述
知识产权归属	III 2	项目成员拥有自己所创造的知识产权所有权。
信息分享和公开	IV 2	研究报告可以向各自政府汇报和向公众公开，但是条款中明确表示了所公开的报告中不得涉及涉密信息以及会破坏专利申请新颖性的信息。
知识产权许可	V 4.1 V 5.1	知识产权普通许可的规定并不自然延及被许可公司的子公司。母公司和子公司是各自独立的法人，给予母公司的授权不应当然地被同时给予子公司，应该另行许可，而且这一点应当由当事人自己决定，因此不在 TMP 中强制规定。
共有知识产权的许可	V 4.2	鼓励技术转移，要求项目知识产权所有权人不应拒绝向项目以外的第三方许可知识产权。而且，对于双方共有的知识产权，一方权利人向第三方的授权无需向其他共有者报告，也无需向中美政府汇报。 但是这种许可只能是普通许可，不能为独家或者独占许可，而且许可所得应在所有权利人之间进行分配。（因此要求限定此许可为普通许可，至于许可所得的分配问题，建议由项目合作双方自行约定。）
仅用于科学研究的知识产权许可	V 5.1	据美方要求，删掉了免费许可中的“免费”二字，在美国仅仅为科学研究使用他人专利权需要经得所有权人的许可，可以收费。 在中国，根据中国专利法第 63 条，仅仅为科学研究使用他人专利权的行为属于合理使用，无需取得授权也无需付费。

Table 4 Important clauses in TMP

Key Issues	Clause No.	Key Points
IP Allocation	III 2	Participants shall retain ownership of Project IP created by themselves.
Information Sharing & Release	IV 2	Research reports shall be released, except for that which cannot be disclosed to the public in accordance with applicable national or other laws and regulations regarding secrecy, confidentiality or the need to preserve the novelty of an invention for purposes of patenting
IP Licensing	V 4.1 V 5.1	Non-exclusive IP licensing provisions shall not naturally extend to licensee's subsidiaries or branches. Sub-licensing shall be grant by Licensor independently, non-exclusive IP licensing provisions shall not naturally extended to licensee's subsidiaries or branches.
IP Licensing of Co-invention	V 4.2	Encourage sharing; prevent a party which is IP owner refusing license to the other party in joint funded research on reasonable terms. In addition, unless otherwise required by law, an owner can license to third parties without accounting to the co-owner. However such licensing shall be restricted in non-exclusive Licensing.
IP Licensing of Invention for Research Purposes only	V 5.1	Deleted the word “free” in licensing, in the US, even licensing for scientific research only may charge. In China, according to Article 69 of Chinese Patent Law, Any person uses the relevant patent especially for the purpose of scientific research and experimentation shall not be deemed to be patent right infringement.

最终达成的中美 ACTC 联盟间的 TMP 协议文本，得到了中美清洁能源研究中心双方负责人的肯定，对中美清洁能源其他联盟的 TMP 制订具有一定的借鉴意义。

The finalized TMP of ACTC has been recognized by both US-China CERC-ACTC leader. It has certain reference significance on TMP formulation to the other consortium of US-China Clean Energy Centre.

此外，知识产权项目组还初步拟定了子项目知识产权协议范本，为下一步中美技术合作项目中的知识产权管理问题的研究打下基础。

In addition, IP project team also developed a preliminary model for project based IP Agreement, which made a foundation for further research on IP management issues between technical sub projects.

4．研究内容/Statement of Work (SOW)

2011 年 7 月 1 日，中美清洁能源联合研究中心清洁煤技术联盟富氧燃烧课题在武汉华中科技大学召开了课题启动会，课题的中方各参与单位的 8 名代表，包括华中科技大学、清华大学、哈尔滨工业大学、中国电力工程顾问集团公司等，就课题相关工作进行了讨论，并在当天晚上与美方课题牵头单位巴威公司召开了网络电话会议。模拟和评估、清洁转化等其他课题组也都与美方召开了不同形式的课题启动会，并形成了会议纪要。这标志着中美双方的合作按不同课题任务已进入到实质性阶段，各课题在一年的合作中都取得了一定的成果。

On July 1st, 2011, the oxy-fuel combustion group of both sides, including members from HUST, Tsinghua U., HIT, CPECC in China, and B&W in USA, held a meeting through internet to start their cooperation. Other task teams also had similar start-up meetings between the two sides and meeting minutes were produced. This means the cooperation between China and USA in ACTC entered a material period and the cooperation led to certain results during the year.

Task-1 清洁发电/Advanced power generation

中国的能源消费结构，决定了中国发电行业将长期以煤炭作为燃料，2010 年中国平均供电煤耗为 330kg/kWh, 而超超临界机组的供电煤耗为 297 kg/kWh，超超临界超 700 度示范机组煤耗将降低到 265g/kWh. 按照 2008 年中美两国的电力消耗煤量，当供电煤耗降低 1g/kWh，中美两国减排的 CO2 量将分别达 1000 万吨和 800 万吨。因此，结合中方科研院所和发电集团公司，以及美方的巴威等公司，开展 700℃超超临界机组的燃烧、系统研究，以及现役机组的节能减排技术研究，具有重要的意义。

Coal is the dominating primary energy in the energy consumption structure of

China's power generation industry. The average coal consumption is 330g/kWh while 297g/kWh for USC Unit in 2010. According to total coal consumption in power generation industry in 2008, when the average coal consumption reduce 1g/kWh, the CO2 emission reduction will reach 10 and 8 million tons respectively in China and U.S.A. Therefore, it will play a key role in the collaboration researches between several outstanding research institutes and electric generation companies from china and U.S.A for the research of furnace combustion, system optimization and key technologies for 700℃ USC and the in-service power plant to reduce the energy consumption and CO2 emission.

1）设计和建造丝网反应器，利用不同尺度的反应器开展烟煤和热解半焦的燃烧特性，在 TGA、丝网反应器和一维炉上开展热解半焦和煤的混烧特性试验，获得了混煤燃烧的燃尽率和着火指数 I（表征均相着火特性）及丝网测量得到的非均相着火温度之间的关系.

The co-combustion characteristics of bituminous coal with pyrolytical char by different scale of reactor, such as TGA, wire mesh reactor and one-dimensional down-fired combustor. A wire mesh reactor was designed and built, to study homologous ignition characteristics, while TGA for the non-homologous ignition for co-combustion process, and down-fired combustor for the burn out. The relations of the burnout and homologous, non-homologous ignition of co-combustion between bituminous coal and pyrolytical char are obtained

2）单颗粒煤粉燃烧的碳烟形成特性, 用 LII 和多元扩散火焰燃烧器进行单颗粒煤粉燃烧的碳烟形成特性研究，研究燃烧温度、停留时间、煤种和氧浓度对碳烟形成的影响规律

Soot formation characteristics during single coal particle combustion. Soot concentration around single coal particle was measured by the LII and multi-elemental diffusion flame burner on the different conditions, such as combustion temperature, resident time, coal types and oxygen concentration.

3）不同燃烧条件下的细颗粒物形成和积灰特性研究。在 25kw 的自维持燃烧一维炉上开展空气燃烧和烟气再循环 O2/CO2 燃烧条件下的对比实验。通过实验比较了形成的细颗粒物(PM10 and PM1)特性、飞灰特性和积灰特性

A comparative study between conventional air combustion and flue-gas recycled oxy-coal combustion were performed in a 25kW self-sustained, down-fired pulverized coal combustor. The fine particulates (PM10 and PM1), bulk ash particles and ash deposits were compared.

Task 2 清洁转化/Clean Coal Conversion Technology

随着石油、天然气资源日趋短缺，对于煤炭资源相对丰富同时又是煤炭消耗大国的中美两国，实现以煤炭为资源的清洁高效转化，不仅可以大幅度提高煤炭转化效率和价值，同时可以有效缓解石油天然气短缺问题。研究开发先进的煤炭转化技术，获得以煤炭为资源的低成本的化工产品、液体燃料是中美两国的共同需求。本任务拟组合中美两国的研究力量，开展煤的热解-气化-燃烧分级转化多联产系统、新型煤化工多联产、先进煤炭气化技术等方面有望可以实现煤炭的清洁高效转化利用技术的研究和开发，实现煤炭高效低成本转化、碳捕集以及低污染物排放。

依托中美两国研究团队的现有研究基础，重点开展煤炭热解气化燃烧分级转化、新型煤炭气化（煤炭化学链气化、煤炭直接制天然气、煤炭催化气化、煤炭液化残渣气化、超临界水解气化）、煤炭生物质共转化等方面的研究与开发，在对关键过程的实验与理论研究基础上，部分技术实现在中美两国的工业示范，并促进所研发的技术在两国的发展与推广。

Coal may be used as resource by Clean Coal Conversion technologies, and may improve 3-E (Efficiency, Economic, and Environment) of coal utilization in large scale. Because coal is the main energy resource for China and USA, both countries need the advanced coal conversion technologies for chemical products and liquid fuel to relieve the shortage of oil and natural gas, especially in China. This task will organize the research partners from USA and China to development of advance coal conversion technologies to realize high conversion efficiency with low cost, low

carbon emission and high profit. These advance technologies will include new coal co-generation systems with low CO_2 emission, new coal gasification processes, coal/biomass co-conversion process, and coal water slurry and its utilization.

Based on the research basis of the China team and USA team, the partners will complete the research and development of the new co-generation system with combined pyrolysis, gasification, and combustion, advanced coal gasification processes (Chemical Looping gasification with CO_2 capture, Direct SNG production from coal, Coal to SNG by Catalytic gasification, Gasification properties of the Coal liquefaction residue, Supercritical water catalytic gasification for low grade fuel (coal and waste, et al)，coal/biomass co-conversion process, and coal water slurry and its utilization. Part of developed technologies will be demonstrated successfully at industrial scale for development and sale in both countries.

1）煤炭热解气化分级转化多联产技术

Co-generation system combined pyrolysis, gasification and combustion

（1） 目前研究现状的综述；

（2） 热天平及热解仪上煤炭热解特性的实验研究；

（3） 完成小型煤炭热解实验台架的设计；

（4） 完成 1MWt 煤炭热解燃烧分级转化试验台架的改建

(1) Reviews on the art-of-state of coal co-generation system based on coal pyrolysis；

(2) Experiments on typical coal pyrolysis process by TGA and Py-GC;

(3) Design of the bench scale coal pyrolysis facility；

(4) Retrofitting of 1MWt coal co-generation pilot plant combined pyrolysis, gasification and combustion.

2）具备 CO_2 富集能力的煤炭化学链气化技术

Chemical Looping Gasification with CO_2 Capture

（1） 目前研究现状的综述；

（2） 采用 ASPENPlus 软件开展煤炭化学链气化利用系统的能量与质量平衡的模拟研究；

（3） 在热天平上开展 CaO 载体的活性变化特性及活性改善方法的研究；

（4） 开展 20kg/h 级的化学链气化试验装置的设计及建设；

The followed research works of this sub-task are carried based on the research plan in 2011:

(1) Reviews on the art-of-state of chemical looping gasification processes

(2) Mass and Energy balance simulation on Chemical Looping gasification process with ASPEN PLUS software.

(3) Experiments on the characteristics of the reactivates of the CaO-based sorbent during cyclic calcination-carbonation reactions in the chemical looping gasification process with pressure TGA；

(4) Design and construction of around 20 kg/h constructed chemical looping gasification facility.

3）煤直接液化残渣气化特性研究

Gasification properties of the Coal direct liquefaction residue

(1) 收集资料，文献综述；

(2) 液化残渣及气化煤样采集；

(3) 对液化残渣和典型神华煤的性质进行分析研究；

(4) 实验室设备及原料调研购置

The followed research works of this sub-task are carried based on the research plan in 2011:

(1) Review on the references;

(2) Sampling the coal and DTL residue;

(3) Analysis on the properties of Shenhua coal and DTL residue;

(4) Constructing the experiment facilities.

4）非常规气化过程测量、模拟及环保技术研究

Measurement \ Modeling \ Environmental Technologies for Unconventional Coal Gasification

本子任务中美双方依据研究内容确定双方所承担的研究工作，并依据研究计划在 2011 年开展了如下研究工作：

（1） 在建立大尺度可控气氛立式热天平分析系统，并开展了煤块在不同尺寸、不同温度、不同升温速率和不同气化剂下的气化特性的实验研究；

（2） 建立了管式热解反应器实验系统，并开展乌兰察布褐煤在不同温度和不同升温速率下的热解反应特性的试验研究；

（3） 在中方所提供的乌兰察布现场的基本地质水文情况等条件下，美方正在应用 ERT（井间电阻法）对乌兰察布现场进行计算机模拟监测，计算可能的精确度，并初步完成了乌兰察布现场地质模型的制作。

（4） 目前，正开展利用新奥集团乌兰察布煤炭地下气化项目现场的地质和煤层参数数据建立电阻层析成像技术的模型，通过对煤层导电特性的持续检测和模拟，获得煤炭地下气化过程的燃空区和热扩散区域的扩展特性。

ENN and LLNL have made the agreement to determine the research works of both sides. The followed research works have been carried according to the research plan in 2011:

（1） A seires of experiments on the effect of coal particle size, temperature, heat rate and gasification medium on the gasification characteristics are carried in the established large-scale Thermo gravimetric Analysis system.

（2） A seires of experiments on the effect of temperature and heat rate on the coal pyrolysis charateristics are carried in the established pyrolysis tube reactor.

（3） Based on the basic geology and hydrology situation of Wulanchabu site submitted by ENN, LLNL carried out computer simulations monitor by using ERT (inter-well resistivity method) on Wulanchabu site and calculated the possible accuracy.

（4） An electrical resistivity model based on geology and coal seam parameters of the Wulanchabu UCG project site of ENN is under constructed. UCG cavity and its thermal effects would be studied in this work.

5）煤炭与生物质的共转化技术研究

Coal/biomass co-conversion process

按照任务书计划开展如下工作：

（1） 项目负责人刘炯天院士及课题组相关人员访问了中美清洁煤技术联盟美方合作单位美国西弗尼亚大学、肯塔基大学和劳伦斯·利弗莫尔国家实验室等，双方明确了下一步的工作计划和研究内容。

（2） 加强政企合作，积极促进项目研究。由中国矿业大学和连云港市徐圩新区联合南京通用新能源电力有限公司共建“连云港市徐圩新区生物质发电工程”，

（3） 完成了生物质预处理及改性方法，进行了生物质型煤的成型工艺和热解特性研究，实现煤与生物质同步协调共转化；研究生物质与煤共热解的协同效应和相互影响机制；以及生物质与城市污泥共热解制吸附剂的工艺条件和污泥/生物质配比对固体产物吸附性能和孔隙结构的影响。

The subject according to the contractual requirements of the project has completed the following tasks:

（1） Communicating with the US team for cooperation and research following the project: the project leader, academician Jiong-tian Liu, led the researchers of this subject to visit the members of Advanced Coal Technologies Consortium (ACTC) in U.S.: University of Kentucky, Lawrence Livermore National Laboratory and West Virginia University. They exchanged views on the international cooperation and personnel training, especially the cooperation of clean coal technology research and development and discussed the work scheme thoroughly for the next year, made clearly the work scheme and research contents for the next step.

（2） Enhancing the cooperation between government and enterprise to actively promote the project research:. "Biomass Electricity Generation Project of Xuwei New Area in Lianyungang city" was built in cooperation with Nanjing General new Power Energy Company Limited. 。

（3） Progress of experimental study: the pretreatment and modification methods of biomass have been completed, the forming process and

pyrolysis characteristics of bio-coal briquette have been studied and the synchronized co-transformation of coal and biomass has been fulfilled. The synergistic effect and interactive mechanism of co-pyrolysis of coal and biomass have been researched. Process conditions of co-pyrolysis of municipal sludge and biomass for preparing sorbent and the influence of sludge/ biomass ratio on adsorptive properties of the solid products and the pore structure have been studied.

Task 3 燃前捕获/Pre-combustion capture

整体煤气化联合循环（IGCC）技术被认为是最有发展前景的近零排放发电技术之一，研发 IGCC+CCS 技术对中美两国都具有重要战略意义。在已有的研究基础上，需要进一步开展系统集成优化、模块化设计研究，从而将该技术推向商业化发展。本年度主要研究内容如下：

Integrated Gasification Combined Cycle (IGCC) technology is considered as one of the most promising near-zero emission power generation technologies. Researches and developments of IGCC + CCS technologies have important strategic significance both for China and the U.S.. It is necessary to research further on the integration, optimization and modular designs of IGCC and IGCC+CCS system to promote the commercialization of the technology.

1）30MWth 基于 IGCC 的 CO2 捕集系统工艺比选

The progresses comparison and selection of $30MW_{th}$ pre-combustion CO_2 capture system

燃烧前 CO2 捕集系统工程，对环境保护、能源综合利用具有重大示范效应，所采用的工艺路线应当确保能耗低、高环保、投资少、技术先进。本年度完成了捕集系统工艺比选工作，确定最佳工艺路线。

Pre-combustion CO2 capture pilot project has a significant demonstration effect on environment protection, energy utilization. The process route should be with low energy consumption, good environmental protection, less investment and advanced technology features. The progress comparison and selection of 30MWth pre-combustion CO2 capture system have been done this year and determine the

optimum technical route.

2）基于 IGCC 的 CO2 捕集系统各单元建模

Every unit modeling of the CO_2 capture system based on IGCC.

基于 Aspen plus 化工流程模拟软件，对 IGCC 的 CO2 捕集系统各单元进行建模.

Based on Aspen plus chemical process simulation software, the pre-combustion CO2 capture system units modeling are developed

3）建立基于 IGCC 的 CO_2 捕集系统工艺包。

(3) The technology package of CO_2 capture system based on IGCC.

在建模基础上，建立基于 IGCC 的 CO2 捕集系统工艺包

A technology package of CO2 capture system based on IGCC is formed based on the model.

Task 4 燃后捕获/Post-combustion capture

为了捕集在发电过程中产生的 CO2，人们研究比较了许多不同的技术和过程。但是目前所有的技术费用成本都较高，主要来自于能源消耗的操作费用和昂贵的设备费用。然而，理论的碳捕集成本却比目前可用的商业化过程的要低很多（10-20 倍）。如果先进的碳捕集技术可被商业应用，同时保持较高的碳捕集效率和低的设备和运行成本，那么实施碳捕集的市场时间表将被大大提前。通过中美清洁煤技术联盟的共同努力，研究者将会克服主要障碍，实现较高的发电效率和对环境较小的影响。本年度主要研究内容如下：

To capture CO2 during the power generation process, many technologies and processes have been investigated and compared. However, all of the current approaches have high capture costs, primarily from operational expenses (energy consumption) and expensive capital equipment. The theoretical efficiency of capture is much lower (10 to 20 times) than what is commercially available today. If advanced capture processes can be commercialized with substantially higher capture efficiencies and lower equipment and operating expenses, then the market penetration timeline for CCS may be greatly enhanced. Through the joint effort of US and China CERC-ACTC, researchers will tackle the major hurdles of producing electricity with

high efficiency and lower environmental impact.

1）溶剂开发与评价 Capture Reagent Development and Evaluation

开发具备“高吸收率和高吸收负荷、低再生能耗”和“低蒸汽压、抗降解性能好”特点的新型吸收剂，以实现烟气中 CO2 高效、低成本的脱除。同时针对有机醇胺吸收剂降解、腐蚀等问题，开展相关机理研究，以期寻找解决对策，实现吸收剂持久可靠的长期运行。

Develop new absorbent featuring “high absorption ratio and capacity, low energy consumption for regeneration”, and “low steam pressure and good resistance against degradation” given the characteristics of coal-fired power plant as high flue gas flow rate, complicated composition and CO2 content as 10-15%, so as to realize the high efficiency and low cost removal of CO2 from flue gas. Meanwhile, conduct relevant mechanism research for the degradation and corrosion of organic alkylol amine absorbent to find a solution of the reliable and long-term use of absorbent.

对 20 种左右有机醇胺单体、百余种上述单体组合的二元、三元混配型吸收剂进行了性能比较，获得了吸收容量、相对吸收速率、再生比例、最佳再生温度等参数，并对模拟烟气的比例、吸.收温度、吸收剂溶液质量分数等参数进行了控制因子的对比测试。

We compared the performance of 20 monomers of organic alkylol amine and over 100 kinds of binary or tertiary compounds from these monomers so as to get such parameters as absorption capacity, relative absorption rate, regeneration ratio and best regeneration temperature. Besides, we have also conducted the comparison test for the control factors of the parameters as the proportion of simulation flue gas, absorption temperature and the percentage (by mass) of absorption solution.

结合系统条件和设备材质，搭建了金属试片在模拟烟气和捕集条件下的腐蚀测试平台，完成了不同金属试片（碳钢、不锈钢）在不同吸收剂溶液中腐蚀情况的对比实验。对试片表面的腐蚀产物进行了形貌和化学组成分析，对不同试片、不同条件下的腐蚀类型进行了初步判断。

The corrosion test platform for metal test piece simulating flue gas and capture conditions was established based on the system conditions and equipment materials for the comparison tests of various metal test pieces (carbon steel, stainless steel) in

different absorbent solution under corrosion. The appearance and chemical composition analysis for the corrosion product at the surface of test piece was conducted for preliminary study on the corrosion of different test pieces under different conditions.

进行了具有下临界温度的吸收剂的筛选，完成了吸收和解吸实验，对吸收剂的 CO2 担载量、循环吸收能力、吸收速率等进行了研究。Study on the solvents with low critical solution temperature. Experiments on absorption and stripping were done. The performances as CO2 loading, absorption capacity, absorption rate were compared among the target solvents.

2）中试系统运行优化

Operation Optimization of Pilot Plant with Post-Combustion Carbon Capture System

根据中美 CERC 合作内容，将进行中试系统的运行优化。本次合作针对华能上海石洞口第二电厂 10 万吨/年 CO2 捕集装置进行性能试验与运行优化，实现能耗、投资的进一步降低，为脱碳技术产业化和大规模应用奠定基础。性能实验主要调整的运行参数有胺液浓度、烟气量、溶液循环流量、再生塔液位、再生温度、再生压力以及吸收塔吸收温度。

Operation optimization for the pilot plant was conducted based on the CERC cooperation agreement. This cooperation action was to conduct performance test and operation optimization for the 100KTA CO2 capture unit of Shanghai Shidongkou No.2 Power Plant, aiming at further reducing the energy consumption and cost so as to set foundation for the commercialization and large-scale deployment of carbon removal technology. The operation parameters adjusted in the performance test are mainly concentration of alkylol amine solution, flue gas flow rate, solution circulation flow rate, level of stripper, regeneration temperature, regeneration pressure and the absorption temperature of absorber.

3）100 万吨/年级燃烧后 CO2 捕集及利用系统可行性研究

Feasibility Study of the 1 Million Tons/year Post-combustion CO2 Capture systems.

系统集成研究针对燃煤电厂原有发电单元及因 CO2 捕集而增加的系统之间

的关系进行深入分析，并结合 CO2 捕集的需求进行集成优化设计，降低对发电系统的影响。

System integration study is for the in-depth analysis for the relationship between original power generation units of coal-fired power plant and the newly added systems due to CO2 capture, optimized integration design based on the needs of CO2 capture and reducing the impact on power generation system.

Task 5 富氧燃烧/Oxy-combustion

中国和美国都有大量的煤炭资源，包括褐煤、烟煤、贫煤和无烟煤等。中美清洁煤技术联盟研究者收集各种条件下富氧燃烧的基础数据和工业小试规模实验的运行数据，并对商用规模下利用富氧燃烧进行 CO2 分离的可行性和经济性分析。本年度研究内容如下：

Both China and U.S. have large coal reserves including lignite, bituminous, lean and anthracite, etc. Researchers from US-China ACTC will collect fundamental and pilot-scale data associated with various oxyfuel combustion conditions and conduct feasibility and economic analysis on the commercial-scale deployment using oxyfuel combustion technology for CO2 separation.

1）华中科技大学的 3MW 富氧燃烧全流程试验系统于 2011 年 12 月建成并开始调试，该设施将和巴威公司的 1.8MW 小型锅炉模拟系统一起，为富氧燃烧关键技术研发（如燃烧器考核运行、锅炉放大特性等）提供世界级的研究平台。

3MW Oxyfuel FCS (full chain system) facility of HUST come into commission at December 2011, this in accompany with 1.8MW SBS facility of B&W, will serviced as world level research and development platforms for critical oxyfuel technology, such as burner benchmark, boiler scaling up etc.

2）富氧条件下煤燃烧特性的基础研究

Fundamental study on coal combustion under oxy-fuel environment

(1) 煤粉氧燃烧条件下着火及挥发份燃尽特性研究。

(1) Coal devolatilization, ignition and burn out

选取典型中国褐煤，烟煤和无烟煤，利用平面火焰携带流反应器对煤粉在高

温下的着火特性和脱挥发份特性开展了相关研究，特别关注了低氧浓度下和 O2/CO2 气氛下的相关特性。

The typical Chinese lignite, bituminous coal and anthracite were chosen. And a flat-flame entrained flow reactor with a high-speed camera was used to carry out related research about ignition and devolatilization characteristic during pulverized coal combustion in high temperature. Emphasis was placed on ignition and devolatilization behavior of pulverized coals in the environment with lower oxygen content and high CO2 content.

(2) 氧燃烧方式下气相燃烧的化学动力学机理

(2) Reaction mechanism of gaseous combustion

选取 P. Glarborg et al 等提出的 97 组分，778 甲烷燃烧基元反应详细机理，借助 DRGEPSA 方法，得到 26 组分，171 基元反应的骨架机理，该机理与详细机理的误差上限为 7%，可适用于 T=1000K-2000K, Φ=0.5~2, P=1~20atm。

An 26 species, 171 reactions skeletal mechanism of methane oxidation under oxyfuel environment was developed using DRGEPSA method, based on the Glarborg’s 97 species, 778 reactions detail mechanism. The error is lower than 7 pecents for T=1000-2000K, Φ=0.5~2, P=1~20atm.

(3) 富氧燃烧的辐射特性模型

(3) Radiative properties model

针对富氧燃烧的大光程、高 CO2、H2O 分压和宽 CO2、H2O 分压比特性，以高分辨率的 HITEMP 数据库和高精度的 FSK 气体辐射特性为基准，对工程中常用的灰气体加权辐射特性模型(WSGG)进行了修正。在该改进的 WSGG 模型和 SLW 模型基础上，进一步了考虑烟黑(soot)的辐射特性及其对富氧燃烧辐射传热的影响。

An improved weighted sum of grey gases (WSGG4+1) model was developed based on HITEMP spectral database, which is applicable to the large optical length, high CO2, H2O partial pressure and wide CO2 vs H2O ratio characteristics of oxyfuel combustion products. The influence of soot on radiative properties and radiant heat transfer in oxyfuel environment were further investigated based on the improved WSGG and SLW models.

(4) 富氧燃烧过程中重金属 Hg 的化学反应动力学

(4) The chemical kinetics of mercury speciation during oxyfuel combustion

发展了一个涉及 Hg/C/H/O/Cl/N/S 7 种元素，涵盖 5 大机理，包括 70 种物质、280 个基元反应的较为全面的汞的均相氧化动力学模型。

A comprehensive kinetic model of homogeneous mercury oxidation has been developed, which involves Hg/C/H/O/Cl/N/S 7 elements, contains 5 mechanisms, and includes 70 species and 280 elementary reactions. Hg oxidation chemistry, Cl chemistry，CO chemistry，NOx chemistry，SOx chemistry and a submechanism on reciprocal transformations of NOX / SOX are involved.

3） 富氧燃烧过程的静态和动态模拟

Static and dynamic modeling of oxy-fuel processes

对 600MW 亚临界、超临界富氧燃烧系统 ASPEN 静态过程模拟分析，对空分、富氧燃烧锅炉系统、汽水系统、压缩纯化系统等进行动态建模，对烟气循环率、氧气浓度、氧气过量系数等参数、运行方式（负压/微正压）、脱硫方式以及烟气循环方式（干循环/湿循环，冷循环/热循环）等进行了分析。

The steady-state process simulation of typical oxy-fuel pulverized-coal-fired power plants (300MWe subcritical, 600MWe supercritical and 1000MWe ultra supercritical) is finished using the commercial flowsheet software Aspen Plus. It is ready to carry out dynamic process simulation for ASU (air separation unit), oxy-combustion boiler system, steam-water system (turbines and feed water heaters), and FGU (flue gas treatment unit for CO2 compression and purification). Many important operation parameters (including flue gas recycle ratio, oxygen concentration, oxygen excess factor), operation modes (slightly negative pressure and slightly positive pressure), desulfurization measures and flue gas recycling modes (hot (wet) recycle, and cold (dry) recycle) are systematically and comprehensively analyzed.

任务 6 CO2 封存/ CO2 Sequestration

通过测井资料、矿物岩石学、常规三维地震法以及微地震监测法等研究了场

地的各种地质和储层特征。研究了 CO2 在咸水层中的多相渗透机理和界面效应。对沁水盆地晋城一组无烟煤煤样进行了吸附解吸试验，建立了一套包含气体竞争吸附、竞争扩散、气体渗流以及煤基块变形的多物理耦合过程的数学模型。

Most of the participant units have completed the geological data collection and preliminary analysis in the target region. CUMTB has collected, analyzed and normalized the geological, well drilling and logging data of Block A in the south part of Ordos Basin. Also the GR, AC, Porosity, DEN and Resistivity logs of wells with good conditions and complete information are selected and normalized. Integrated reservoir characterization with microseismic and seismic data was done. CUMT conducted adsorption isotherms experiments of single gas-CO2 and binary gases crossing the supercritical temperature (31.4℃) on Jincheng anthracite coal samples from Qinshui Basin. A new numerical model was developed to determine the coupled multiphysics of gas competitive adsorption, gas counter-diffusion, gas flow, coal deformation induced by coal-gas interactions. CUMT also analyzed the basic characteristics and distributions of the stress field, thermal force field, and fluid field in depth of 1500 m ~ 3000 m in Qinshui Basin

对超临界压力 CO2 在深部咸水层中的运移规律进行了可视化实验研究，利用孔隙尺度数值模拟研究方法研究超临界 CO2 注入储层多孔结构时突破压力梯度和流动时间以及 CO2 饱和度的关系。

Tsinghua University conducted visualization experiment study on the migration mechanism and law of super-critical CO2 based on the test platform they built. Also they conducted core scale and pore scale numerical simulation on CO2/brine two-phase flow in the reservoir rocks to investigate mineral-fluid interactions and their effects on solubility of CO2 in brine.

确立了咸水层封存适宜性区块的评价原则，对鄂尔多斯盆地进行了大尺度表征与建模，建立了咸水层封存场地适宜性评价的初步方法框架。

CSCLC and IRSM has established the evaluation principles to be used for target block suitability assessment. A suitability assessment methodology framework has already been built. A large scale site model has been built and preliminarily characterized.

收集了鄂尔多斯盆地的地质资料，并已在煤制油厂附近开展了三维地震勘探和钻探活动，为深刻认识特定区域的地质条件提供了保障。

CSCLC has finished the 3D seismic and drilling exploration, and Shenhua CCS pilot project is under way now, these works provide a research base for this task.

确定了 CO2 驱提高采收率油藏筛选评价方法基础上。在露头和探井岩芯观测基础上，采用综合识别方法，对目的层的构造裂缝系统进行了表征、建模。建立了 CO2 驱试验区地质模型建立，完成延长油田适宜 CO2-EOR 的储量资源评价和 CO2 驱试验区的筛选工作。

SPIERCE has established a siting and assessing methodology. Target formation has been modeled and characterized using synthetic recognition method built based on outcrop observation, lab core test and exploratory well analysis. Yanchang Petroleum Group Co. Ltd. Has finished the geological model of pilot region for CO2 displacement. The reserve evaluation and the pilot block siting in Yangchang oilfield have been completed.

任务 7—CO2 利用/ CO2 Utilization

2011 年度采取核辐射和逐级扩培的方法培养微藻，筛选多个优良藻株，并挑选其中两株，利用电厂烟道气进行培育，以判断其对微藻生长和藻产品的影响。

In 2011, several microalgal cells were subjected to mutagenesis using 60 Co-rays. After a few days incubation, they were sorted by Flow cytometry for screening algae strains with high lipid productivity. Two strains selected were cultured with flue gas from a power plant. The effects of flue gas on microalgal growth and product were studied.

1）从全国各地分离获得 140 余株藻株，对其中 40 株优势栅藻进行集中评价，确定 4 株生长迅速、高产油藻株。

1）More than 140 strains were isolated from the samples over the country, and purified 40 strains of Scenedesmaceae were put together to compare the capability of the accumulation of biomass and lipid. Finally 4 best strains were identified with high productivity of biomass and lipid.

2）完善微藻核辐射诱变育种技术路线，并建立了流式细胞仪快速筛选高产油藻株的方法。

2）Nuclear radiation mutation breeding technology of microalgae and the rapid screening of oil-rich algae strains with fluorescence-activated cell sorting method were established.

3）得到两株高产油突变株 S16 和 S20，培养 15 天时总脂含量相较于野生株分别提高 8.3%和 38.8%。

3）Two mutants S16 and S20 with high lipid productivity were obtained, and their total lipid content increased 8.3% and 38.8% respectively compared to the wild type.

4）建立高产油微藻的基因转化方法，构建转基因突变体库。

4）The foreign DNA was transferred into algae cells by electroporation. A transgenic mutant library was set up.

5）在中国电厂利用烟道气实现了微藻的中试规模的高密度培养，证实燃煤电厂的烟道气十分有利于微藻繁殖。

5）The high density microalgal cultivation in pilot scale is achieved in Chinese power plant. The test results show that flue gas can be utilized to grow microalgae without further treatment.

6）在美国燃煤电厂完成微藻减排实验后，将继续建设微藻生物能源工业方案示范基地。

6）After the preliminary experiment of microalgal biofixation of CO2 in the U.S., a one-hectare demo project aiming at capturing flue gas and producing bio-energy will be constructed.

Task 8 模拟和评估/ Simulation and Assessment

1）带 CO2 捕集的燃煤电站建模与仿真研究，设计全尺寸的燃烧后 CO2 捕集燃煤火电站的系统流程和参数，进行静态流程模拟，建立二氧化碳捕捉设备和系统的动态数学模型，为进一步开发动态仿真装置奠定基础。

Modeling and simulation of coal-fired power plants with CO2 capture. Design

the process and working conditions of full scale post-combustion CO2 capture power plant and establish flow sheet model. Develop dynamic models of unit operations of CO2 capture system to be prepared for further development of dynamic simulator of power plant with carbon capture；

2）二氧化碳埋存地址封闭后管理方法研究，封闭后需移交的内容及其移交方式分析，移交内容后续运营管理模式探析

Post-sequestration management，analysis of the items to be transferred and their transfer modes after site-closure；study on a practical management framework in the post-closure regime；

3）全脱碳燃煤发电系统（包括燃烧前和燃烧后）的设计和静态建模，研究全脱碳燃煤电站（燃烧后捕集）的工艺方案设计和系统静态模型，全容量脱碳IGCC+CCS 系统的静态模拟（全系统）

Design and static simulation of coal-fired power plant with total carbon capture, including pre- combustion and post- combustion, System scheme design and system static model Research on the system scheme design and system static model of thermal power plant with total carbon capture；the system static simulation of IGCC with total carbon capture；

4）基于 IGCC 的 CO2 捕获系统模拟研究，煤气耐硫变换技术流程模拟与优化，脱硫脱碳工艺流程模拟与优化，煤气中温变换＋膜分离流程模拟与优化。

Simulation of IGCC based CO2 capture systems, simulation and optimization of sulphur-tolerant water-gas shift technical processes；Simulation and optimization of sulphur and carbon removal processes；Simulation and optimization of water-gas shift at intermediate temperature and membrane separation processes；

5）富氧燃烧碳捕获与埋存系统的综合分析，富氧燃烧碳捕获过程模拟、集成和评价，燃煤发电部门发展 CCS 技术路线的整合评价

Assessment of oxy-fuel combustion system and its deployment potential, Simulation, integration, and assessment of carbon capture in an oxygen-rich combustion system；Integrated assessment of CCS technology roadmap for pulverized coal power plants.

Task 9.1 国际交流/Communication and Integration

1） 联盟双方的工作综合 Integration

清洁煤技术联盟中、英文网站建设及每季度更新，发布新闻、进展、成就等；

Construct a bilingual website for the ACTC for sharing news, progress, and achievement advertising with decision-makers and other interested stakeholders. Update the website at least quarterly.

2）间报制作，介绍项目的进展情况；

Develop and produce newsletters which outline the key outcomes under each research theme and within the projects highlighted in the joint work plan.

综合联盟的成就、进展，编制年度报告；向项目负责人和决策者提供联盟最新进展信息、合作模式分析和改进建议。

Integrate the achievement, progress, and produce an annual report for the decisionmakers with updated cooperation mode, research progress, and suggestions for future improvement.

3）实现合作过程中的优势互补和融合。

Provide mechanisms to realize mutual complement and mutual amalgamation, to leverage the collective results of the ACTC research for benefits of both countries.

Task 9.2 合作中的知识产权保护问题研究

Research on the IP protection in the cooperation

中美知识产权项目组双方共同起草了技术管理计划关于知识产权条款，为中美清洁能源项目的顺利开展铺平道路。《技术管理计划（TMP）》的订立和签署，是中美科技合作项目启动的前提条件，是双方和联盟各个成员之间信息共享和技术交流合作的基础，是知识产权子项目第一阶段的工作重点。

The US-China IP project team drafted together a "Technology Management Plan (Regarding the exploitation of Intellectual Property Rights). It is a prerequisite for starting the project, is a foundation of data sharing and technology exchange of both consortium members, is the keystone of the first phase IP project.

最终达成的中美 ACTC 联盟间的 TMP 协议文本，得到了中美清洁能源研究中心双方负责人的肯定，对中美清洁能源其他联盟的 TMP 制订具有一定的借鉴意义。

Finalized TMP of ACTC has been recognized by both US-China CERC-ACTC leader. It has certain reference significance on TMP formulation to the other consortium of US-China Clean Energy Centre.

知识产权项目组还初步拟定了子项目知识产权协议范本，为下一步中美技术合作项目中的知识产权管理问题的研究打下基础。

In addition, IP project team also developed a preliminary model for project based IP Agreement, which made a foundation for further research on IP management issues between technical sub projects.

5．研究进展

Task-1 清洁发电/Advanced power generation

本课题在 2011 年开展混煤的燃烧特性研究，以进一步发展更精确的燃烧模型，同时为大容量炉膛的燃烧特性及模型研究打下基础，同时针对超 700℃的积灰结渣问题开展机理性的研究。本课题 2011 年的主要研究成果有:

The co-combustion characteristics and the soot formation were further studied in 2011, which will help to develop accurate combustion model for different scales, such as in the high volume furnace of 700℃ USCC. And the submicron particle and ash deposition mechanism were studied which would affect the boiler efficiency and operation. The main results in the 2011 are listed below:

1）在不同尺度的反应器上开展了煤粉燃烧机理研究，获得了 CBK 模型中的关键参数，同时针对中国褐煤热解半焦在电站中的应用进行了基础性的研究；

1）The coal combustion characteristics was studied in the different scales of reactor, such as TGA, wire mesh and down-fired combustor, which help to develop the CBK char combustion model. The technical evaluation of pyrolytical char from

lignite in the power plant also was conducted.

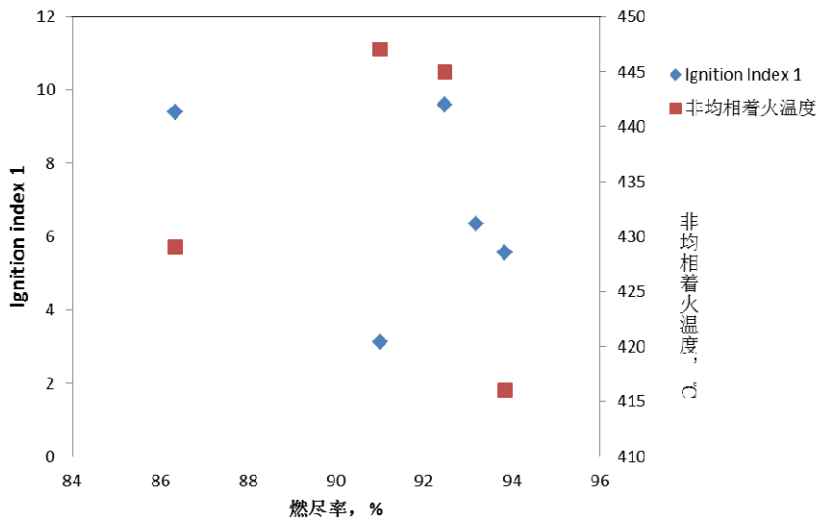

Fig. 1 The relation between ignition and burnout for co-combustion of bituminous coal and pyrolytical char

2）首次利用 LII 测量技术和多扩散火焰燃烧器定量化测量了单颗粒煤粉燃烧过程的碳烟浓度，为研究碳烟在煤粉燃烧过程中的形成、氧化以及对燃烧的影响奠定基础；

2）The soot concentration of single coal particle during coal combustion was measured by LII and the multi diffusion burner, which can help to develop the soot formation, oxidation model and thermal characteristics during these processes.

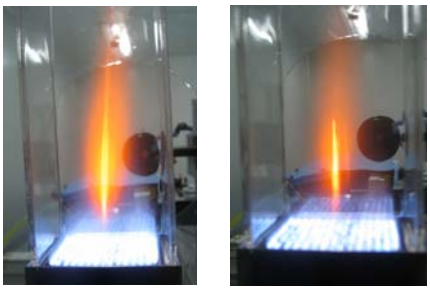

O_2=0.1　　O_2=0.3

Fig. 2 The flame shape of coal combustion in a different O_2 concentration

3）获得了烟气中不同粒径的颗粒形成与积灰规律，为进一步发展基于颗粒动力学的积灰预测与防治技术提供了实验数据。

3）The formation mechanism of fine particle and deposition mechanism were

studied in the down-fired combustor, and the differences in ash deposition are more due to differences in aerodynamics rather than physical or chemical differences in the ash, particularly for the practical self-sustained coal combustor. The results provide the experimental foundation for the ash deposition prediction and prevention model based on the particle aerodynamics mechanism.

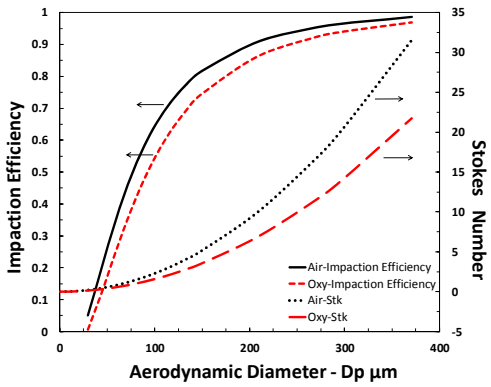

Fig. 3 Stokes number and impaction efficiency as a function of particle diameter for both combustion modes

Task 2 清洁转化/Clean Coal Conversion Technology

通过中美双方参与单位在各子任务中的研究开发工作，按要求提交项目研究进展报告和成果报告，形成具有知识产权的新技术,发表相应论文，并预计在所开展的煤炭转化技术的研究与开发工作上将取得实质性进展：

1) 完成煤炭热解气化分级转化技术的研究与开发，实现煤炭的热解气化分级转化技术的工业示范运行；
2) 完成化学链气化、煤炭气化直接制天然气、煤炭非常规气化等新型气化技术的基础研究，并具备在下一步开展中试研究或工业示范的能力；
3) 完成煤碳直接液化残渣气化特性评价，包括成浆性、气化反应性、灰渣特性等，提出液化残渣气化利用方案，并开发出适宜的残渣成浆添加剂，成浆浓度>61%；
4) 形成煤及生物质共转化新技术，在共热解、气化及液化方面具备在下一步开展中试或工业示范的能力；

5) 形成先进煤转化技术的技术、经济及环境的评价体系

The proposed research and development works will be completed by the joint team with submitting the progress report and final report. The breakthroughs on the coal conversion process will be obtained and several innovation coal conversion technologies will be formed:

1) Developed the co-generation system combined pyrolysis, gasification, and combustion and ready for commercial stage；
2) Developed several new gasification technologies including chemical looping gasification, Coal to SNG by Catalytic gasification, unconventional gasification process；
3) Finishing the gasification properties evaluation of coal DTL residue, include slurryability, reactivity and ash fusibility, and developing new additives, the concentration of slurry >61%；
4) Developed new coal/biomass co-conversion technologies, and co-pyrolysis, co-firing system, and ready for construction of the pilot plant or demonstration plant；
5) Developed the advanced efficiency, economic and environmental analysis methods for the advance coal conversion technologies.

Task 3 燃前捕获/Pre-combustion capture

1）完成 30MWth 基于 IGCC 的 CO2 捕集系统工艺比选工作

1) Complete the progresses comparison and selection of 30MWth pre-combustion CO2 capture system.

本年度完成了捕集系统工艺比选工作，确定了最佳工艺路线：最终确定技术路线为：来自于气化工艺的水洗煤气首先进行耐硫变换反应工序，将煤气中的 CO 转换为 H2 和 CO2，变换气经 MDEA 脱硫及脱碳后，富 H2 气体回注燃气轮机燃烧，脱碳过程回收的 CO2 解吸气经脱硫后去 CO2 液化分离装置。

The progress comparison and selection of 30MWth pre-combustion CO2 capture

system have been done this year and determine the optimum technical route. The finalizing technical route is: the washed gas from the gasification progress firstly goes to the sulfur-tolerant shift reaction progress; then the CO in washed gas is shifted to H2 and CO2; after the desulfurization and decarbonization progress of the shifted gas by MDEA, the H2-riched gas is rejected to gas turbine for combustion, while the recovery CO2 solution suction in decarbonization progress goes through desulfurization progress to the CO2 liquid separation device.

2）完成基于 IGCC 的 CO2 捕集系统各单元建模

2) Complete every unit modeling of the CO2 capture system based on IGCC

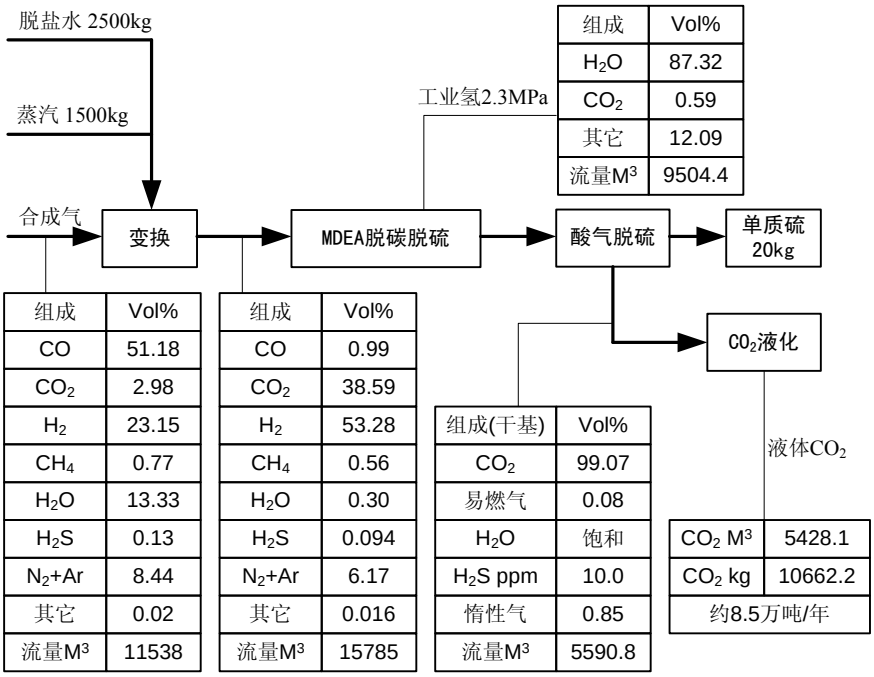

图 4 工艺流程物料框图

Figure 4 Process and material flow diagram

基于 Aspen plus 化工流程模拟软件，完成基于 IGCC 的 CO2 捕集系统各单元建模，用于捕集系统工艺基础设计与分析，获得系统各环节物流参数，作为后续详细设计与分析基础，其物料框图如图 4 所示。

Based on Aspen plus chemical process simulation software, the pre-combustion CO2 capture system units modeling are completed. The model is used for the capture system basis design and process analysis and obtaining system logistics parameters in

various aspects, which are the basis of follow-up detailed design analysis. Figure 4 shows the process and material flow diagram.

3）形成基于 IGCC 的 CO2 捕集系统工艺包

3) Form the technology package of CO2 capture system based on IGCC

在建模基础上，形成基于 IGCC 的 CO2 捕集系统工艺包，包括耐硫变换工段、MDEA 脱硫脱碳工段等工段，获得系统装置规模及组成，原料、产品、中间产品、副产品的规格，催化剂、化学品规格，公用物料和能量规格，系统性能指标的设计。该工艺包拥有自主知识产权，是我国首个燃烧前 CO2 捕集系统工艺包，对中美两国燃烧前 CO2 捕集系统的设计建造具有重要参考意义。同时依托该工艺包，后续将进行系统详细设计及关键设备选型设计，为建造 30MWth 基于 IGCC 的 CO2 捕集系统做好了准备。

A technology package of CO2 capture system based on IGCC is formed based on the model. The technology package includes sulfur-tolerant shift section, MDEA decarburization and desulfurization sections, acid solution suction desulfurization section and CO2 liquefaction section. The technology package gives the system size and composition, specifications of raw materials, products, intermediate and by-products, catalysts, chemicals, common materials, energy state and system performance. The technology package with independent intellectual property rights is the China's first pre-combustion CO2 capture system technology package, which has significant reference value for both Chinese and US pre-combustion CO2 capture system design and construction. Besides, the following detailed design and equipment selection will be done relying on the technical package, which are prepared for the 30MWth pre-combustion CO2 capture system construction.

Task 4 燃后捕获/Post-combustion capture

1）经过溶剂初步开发，初选了某新型溶剂开始在北京热电厂捕集装置上进行试运行，经过 3 个多月的应用实验，结果满足预期。在系统条件一致的情况下，即吸收剂浓度、吸收温度、再生温度、蒸汽耗量等参数只做细微调整的状态下，

CO2 的产出速率有显著提升，单位产量的捕集能耗较原有吸收剂有较大降低，加之降解速率明显减缓，从而使单位 CO2 的捕集成本大大降低。

1) Through preliminary development of solvent, a new type solvent was chosen for the trial run at the capture facility of Beijing Thermal Power Plant. After three months application test, the expected result was achieved. Given identical system conditions, fine-tuning absorbent concentration, absorption temperature, regeneration temperature and steam consumption will significantly increase the CO2 output rate, the energy consumption for per unit output decreases compared with former absorbents; in addition, degradation slows down obviously, so the capture cost for per unit CO2 dramatically decreases.

2）通过负荷调整、溶剂调整以及温度调整等变工况试验，掌握 10 万吨/年 CO2 捕集装置的操作规律和运行关键技术。利用现有的 10 万吨/年的 CO2 捕集示范装置，通过运行试验获取装置在不同季节和大气温度条件下的最佳运行参数；提出了该示范装置在半工况运行、满工况运行以及夏季、冬季各气候条件下的运行指导操作卡。

2) Test with adjustment of load, solvent and temperature has enabled us to master the operation pattern and key operation technology of 100KTA CO2 capture facility. Best operation parameters were obtained through operation tests in different seasons and at temperature conditions with existing 100KTA CO2 capture demonstration plant; operation guide book for the demonstration plant at semi-capacity and full capacity, in summer and winter was prepared.

3）通过系统模拟，研究燃烧后脱碳系统与脱硫系统的整合、与电站热系统的整合，研究从电厂蒸汽系统中的抽汽位置。

3) Integration between post-combustion decarbonizing system and desulfurization system, integration between carbon capture system and the thermal system of power plant and the research for finding the optimum steam extraction point from the steam system of power plant have been carried out through system simulation.

4）在以上技术研发的基础上，在二氧化碳减排方面，杜克能源公司与中国华能集团清洁能源技术研究院合作，在美国印第安纳州欧文斯威尔的 Gibson 电厂三号发电机组进行一项分两阶段的燃烧后二氧化碳捕获项目。该合作项目将采用华能清能院自主开发的燃煤烟气燃烧后二氧化碳捕集技术（PCC）进行 Gibson 电厂三号机组二氧化碳捕集装置前期可行性研究工作，目前可研前期技术评估工作已经有序展开。

4) Based on above technical research and development, Duke Energy and China Huaneng Group Clean Energy Technology Research Institute started to cooperate with each other in the field of CO2 mitigation and initiated a two-phase post-combustion CO2 capture project for the electricity generation unit (EGU) No.3 of Gibson Power Plant located in Evansville, Indiana, US. This cooperation project will adopt post-combustion CO2 capture (PCC) technology for flue gas from coal-fired power plant independently developed by CERI for the feasibility study of CO2 capture facility for EGU No.3 of Gibson Power Plant; the technical evaluation as a part of feasibility study has started.

Task 5 富氧燃烧/Oxy-combustion

1）华中科技大学的 3MW 富氧燃烧全流程试验系统（见图 5）于 2011 年 12 月建成并开始调试。为富氧燃烧关键技术研发（如燃烧器考核运行、锅炉放大特性等）提供世界级的研究平台。

1）The 3MW Oxyfuel FCS (full chain system) facility (Fig. 5) of HUST comes into commission at December 2011 will serviced as world level research and development platforms for critical oxyfuel technology, such as burner benchmark, boiler scaling up etc.

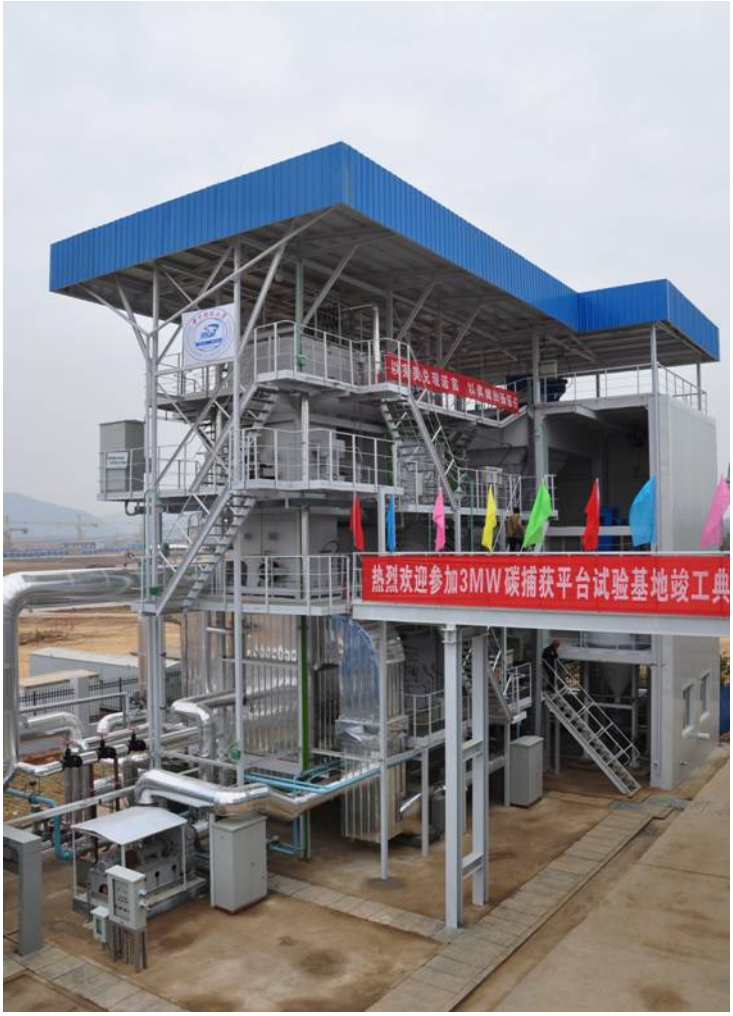

Fig. 5 3MW Oxyfuel FCS facility of HUST
图 5 华中科技大学 3MW 富氧燃烧全流程试验系统

2）富氧条件下煤燃烧特性的基础研究

Fundamental study on coal combustion under oxy-fuel environment

(1) 研究结果显示煤粉在低氧 O2/CO2 气氛下的着火与脱挥发分特性与国内外学者在较高氧浓度（10%~30%）或较低温度（900K~1500K）下的得到的趋势一致。煤粉氧燃烧条件下着火及挥发份燃尽的特性曲线见下面图 6-1、6-2、6-3。

The results indicate that the laws of ignition and devolatilization of pulverized coals in low oxygen O_2/CO_2 atmosphere are consistent with the literature, which focus on the environments of high oxygen contents (10%~30%) or lower temperate (900K~1500K). Figures 6-1, 6-2 and 6-3 below show optical intensity profiles during the coal particles ignition and volatile burnout in Oxy-fuel Combustion.

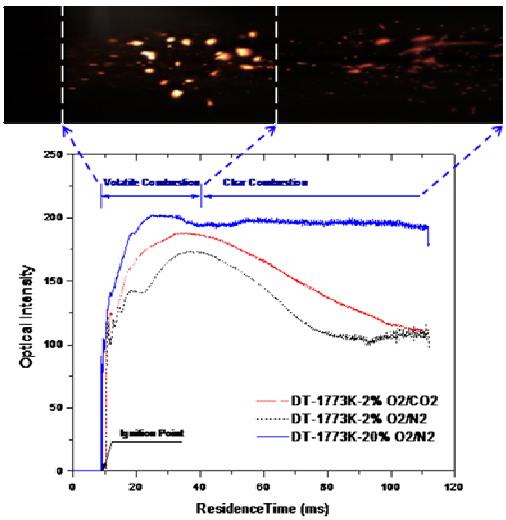

图 6-1 DT 烟煤颗粒光强分布曲线

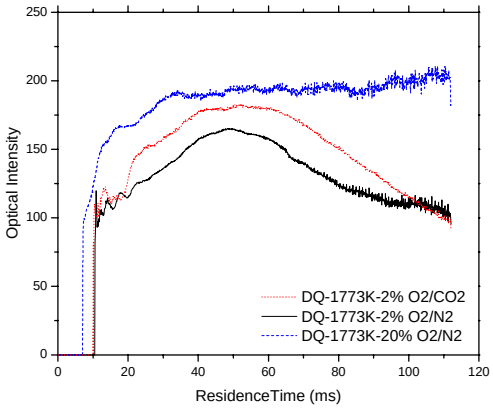

图 6-2 DQ 褐煤颗粒光强分布曲线

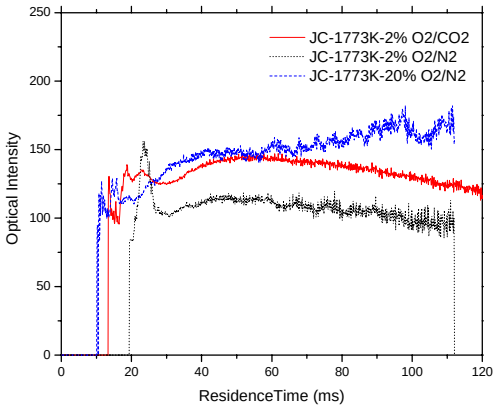

图 6-3 JC 无烟煤颗粒光强分布曲线

(2) 获得氧燃烧环境（Oxyfuel）下，使用简化机理和详细机理得到的不同化学当量比关于不同温度下的着火延迟对比见图 7。由图中可以看出，简化机理和详细机理所预测的着火延迟时间误差非常小。目前该简化机理正被应用于 P. Glarborg et al PFR 台架中关于 CO 等关键性组分的验证。已取得较好的精度和效果。

Figure 7 show the small difference between the ignition delay predicted by the skeletal mechanism and detail mechanism. The mechanism was used to predict CH4, CO etc. in Glarborg’s experiment on plug flow reactor, and the results is satisfactory.

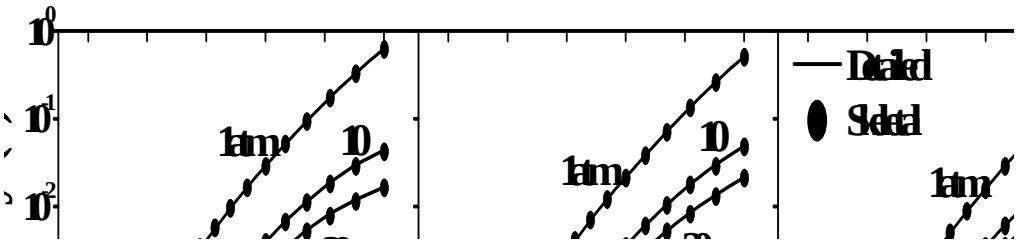

图 7. 不同温度，压力和当量比下详细机理与骨架机理着火延迟对比

Figure 7 Difference between the ignition delay predicted by the skeletal mechanism and detail mechanism

(3) 得到了可用于富氧燃烧条件的改进 WSGG4+1 模型，和文献中类似的模型相对比，该模型在高温下具有更高精度、适应范围宽（可适用于各种干、湿循环的炉内气氛条件，H2O 和 CO2 分压比从 0.05~2.1，最大光程达 50m）。

An improved weighted sum of grey gases (WSGG4+1) model was developed based on HITEMP spectral database, which is applicable to the large optical length, high CO2, H2O partial pressure and wide CO2 vs H2O ratio characteristics of oxyfuel combustion products. The model has merits of high accuracy and wide applicability in comparison to models appeared in the literature. It can be applicable to both dry cycle and wet cyle, the H2O vs CO2 ratio from 0.05 to 2.1, and maximum optical length 50m.

(4) 发展了较为全面的汞的均相氧化动力学模型。利用该模型预报多种燃煤烟气气氛中 Hg 的迁徙、转化规律，并与实验结果进行比较、对照。并确定了烟气中汞氧化的主要反应通道。

A comprehensive kinetic model of homogeneous mercury oxidation has been developed and used to predict mercury speciation and transformation behavior during coal combustion, and the results has been compared with the available experimental data. The key reaction channels for mercury oxidation in flue gas has been determined.

3）富氧燃烧过程的静态和动态模拟

3) Static and dynamic modeling of oxy-fuel processes

完成了 600MW 亚临界、超临界富氧燃烧系统 ASPEN 静态过程模拟分析。在对富氧燃烧过程详细过程模拟的基础上，基于热力学第二定律对富氧燃烧系统进行火用分析，并将其和传统的空气燃烧相对照，结果见图 8

The steady-state process simulation of typical oxy-fuel pulverized-coal-fired power plants (300MWe subcritical, 600MWe supercritical and 1000MWe ultra supercritical) is finished using the commercial. Based on the system simulation results, a detailed exergy analysis from the second law of thermodynamics was conducted to a 600MWe oxy-fuel power plant and its corresponding conventional air-combustion power plants and the results are shown in Fig. 8.

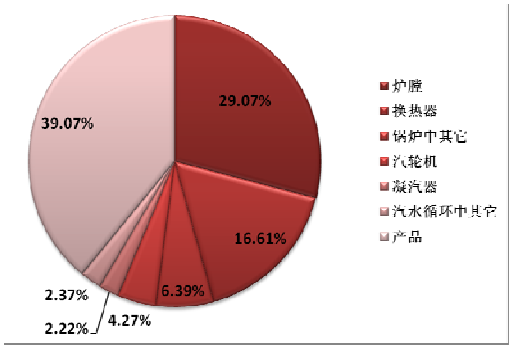

(a) 传统燃烧系统

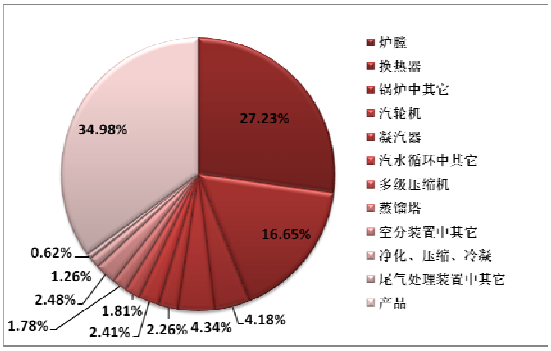

(b) 氧燃烧系统

图 8 两系统中㶲耗散、㶲损失的分布情况

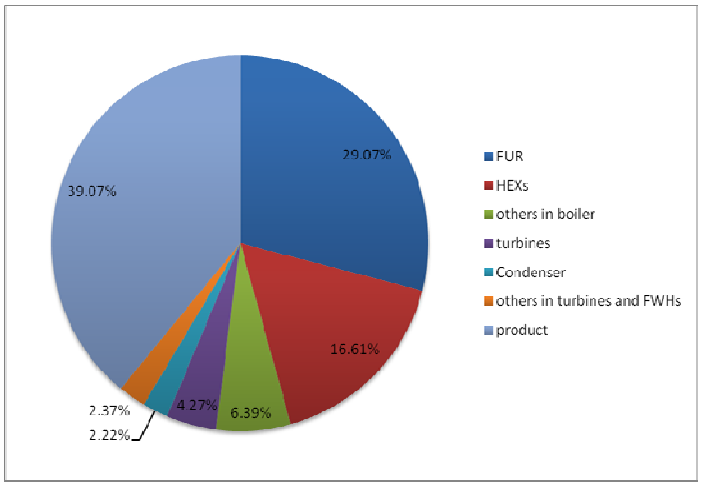

(c) Conventional system

任务 6 CO2 封存/ CO2 Sequestration

1）采用数值方法对多孔介质中 CO2 驱替流动过程进行模拟，揭示了 CO2 驱替流动过程。通过数值方法得到驱替饱和度及毛细压力曲线，为场地驱替模拟提供参数。

CO2 displacement in porous media is simulated using numerical method, which reveals CO2 displacement characteristic. The displacement saturation and capillary pressure curve are obtained using numerical simulation, which provides parameters for field displacement simulation.

2）对界面截断后形成的不同尺寸气泡流动阻力进行了研究，揭示了气泡尺寸与流动阻力的关系。

Flow resistance of different size bubbles generated by two-phase snap-off in porous media is studied, and the effect of bubble’s size on flow resistance is revealed.

3）对于超临界压力 CO2 在深部咸水层中的运移规律进行了可视化实验研究，结果表明：Visualization experiment study on the migration mechanism and law of super-critical CO2 :

（1）用核磁测量得到的岩心孔隙率精确度高于称重法，且操作误差少，适合在线测量；MR-based Rock porosity measure method has a better accuracy that from the traditional method and is easy to use.

（2）利用核磁共振设备观察不同注入比例时的切层图像，在注入比例 CO2 : H2O=3:1 时在入口处出现了较显著的浮升力作用。

MR images from the tests of different CO2 to water ratio shows that when the ratio is 3:1, there appears a significant upward force at the fluid entrance.

4）收集鄂尔多斯盆地内的沉积、构造和区域尺度的参数,并建立 GIS 数据库，为地质模型的建立奠定了基础。

Carry out the data collection and field investigation on the sedimentary, diageneses and tectonic characteristics of Ordos basin. Obtain the basic data for

capacity evaluation, risk assessment and site selection.

5）研究区内延长组主要含段层构造裂缝系统的几何学和成因机理研究，系统地、动态地研究了姬塬-元城地区延长组构造裂缝系统。

Systematically and dynamically study on geometry and genetic mechanism of faults containing fracture system in Yanchang group.

6）合作情况 Cooperation

大部分子课题承担单位都完成了与美方单位的对接，但各家对接以及合作的深度尚不一致。中国矿业大学（徐州，北京）对合作单位劳伦斯利弗莫国家实验室、肯塔基大学进行了访问交流，并对双方的研究内容及进展情况进行了汇报。针对 CO2 地质封存合作研究方法及存在问题进行了交流，并签订了合作协议。

CCS group of China University of Mining & Technology have visited the cooperators Lawrence Livermore National Laboratory, University of Kentucky. In the visit, each cooperator reported respective research contents and progress. We discussed research method and existed problems in CO2 geological sequestration, and signed cooperation agreements.

神华集团近日与美国西弗吉尼亚大学签署了《关于开展煤炭直接液化二氧化碳捕获和封存技术合作的协议》。

Shenhua Group has signed a technical Cooperation agreement on direct coal liquefaction and CO2 Capture and storage with West Virginia University.

中国科学院武汉岩土力学研究所与美国 Los Alamos National Laboratory 建立了合作关系，并进行了深入的交流与沟通，并计划 2012 年 3 月再次见面进行交流与合作。

Institute of Rock and soil mechanics, CAS has build a friendly Cooperation with Los Alamos National Laboratory,USA. The main researchers from the two sides will meet in Wuhan in March,2012, and discuss the further technical problems.

陕西省能源化工研究院和怀俄明州大学能源学院很早便已建立合作关系，并在陕西开展了实质而深入的合作研究工作。并计划与 2012 年 6 月与怀俄明州大学一起承办《第三届国际清洁能源技术应用交流会议》。陕西省能源化工研究院

还与美国怀俄明州地质调查局签署了《关于二氧化碳地下地质封存及综合利用科技合作框架协议》。

Shaanxi Provincial Institue Energy Resources has already built solid Cooperation with University of Wyoming since very early time. They have a great of deep cooperation on substance these years. They plan to co-host a international conference on technology application in June 2012. Shaanxi Provincial Instite Energy Resources has another cooperation partner -Wyoming State Geological Survey, they have signed a Framework Cooperation Agreement on geological storage and Comprehensive Utilization of CO2.

Task 7 CO_2 利用/CO_2 Utilization

1）优良产油藻株选育

Isolation of natural algae with high lipid productivity

从全国各地采集大量的淡水水样和土样，并从中筛选出 140 余株淡水藻株，通过分类鉴定，发现栅藻占据将近三分之一比例，部分存在于土样中。可见其分布之广，适应性强。

ENN has isolated and purified more than 140 strains from the collected fresh water samples and soil samples over the country. Almost one third of them are strains from Scenedesmaceae, and some of them can live in soil.

集合其中栅藻 40 株完成集中性能评价，优选其中 9 株进行复评。51 号和 52 号藻株具有最高生长速度和生物量积累能力（见图 9）。

40 strains of Scenedesmaceae were put together to compare the capability of the accumulation of biomass and lipid. Finally 9 best strains were confirmed and screened out for further screening. Strain 51 and strain 52 had the higher growth rate and biomass productivity (See Fig. 9).

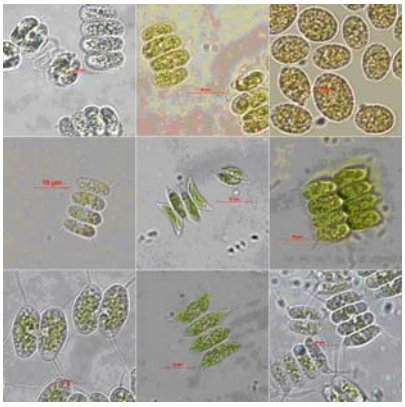

图1.3 部分栅藻图片

Fig. 9 Some of the Scenedesmaceae strains

2）富油藻株的诱变育种及快速筛选技术

Mutagenesis and rapid screening of algae strains with high lipid productivity

利用 60Co-γ 射线对小球藻进行核辐射诱变，诱变后藻液培养一段时间后，上流式细胞仪进行高产油藻株筛选。

The Chlorella sp. cells were subjected to mutagenesis using 60Co - rays. After a few days incubation, it was sorted by Flow cytometry for algae mutants with high lipid productivity.

诱变后的小球藻经尼罗红染色，上流式细胞仪对荧光信号强（即油脂含量高）的藻株进行分选，得到的近 200 株突变株经过高通量筛选和评价体系评价，最终得到 2 株油脂含量明显提高的突变株，S16 和 S20。培养过程中其总脂含量一直明显高于野生对照株；培养到第 15 天时，其总脂含量分别达到 33.33%和 42.72%，较野生对照株（30.77%）分别提高 8.3%和 38.8%。

After stained by Nile red, the Chlorella sp. cells were sorted by flow cytometry for the cells with high intensity fluorescence signal which may be algal strains with high oil content (Fig. 1.5). Nearly 200 mutants were obtained. After screened by high throughput screen and assessment system, 2 mutants, S16 and S20, were confirmed to have significantly higher oil content. The total lipid content of S16 and S20 was higher than that of wild type control. In the 15th day, the total lipid content of the two mutants reached to 33.33% and 42.72% of the biomass respectively, and increased 8.3% and 38.8% compared to the wild type control (30.77% of the biomass).

3）高产能微藻转化方法研究

Algal transgenetic research for high productivity

成功建立一株高产油微藻的基因转化方法，并利用该转化方法构建产油微藻转基因突变体库。使用电激转化的方法，将外源 DNA 导入藻细胞当中，通过选择性筛选，获得具有外源 DNA 特性的转基因藻落。以该方法为基础，构建藻转基因突变体库（图 10）。

Foreign DNA was successfully transferred into a high oil yielding algae strain and some transgenic algae colonies have been obtained. After the transgenic method of the algae was established, a transgenic mutant library was built in this way. The foreign DNA was transferred into algae cells by electroporation. Treated cells were spreaded on the solid medium containing selective marker for foreign DNA, and the positive transgenic algae colonies were obtained. A transgenic mutant library was set up in this way.

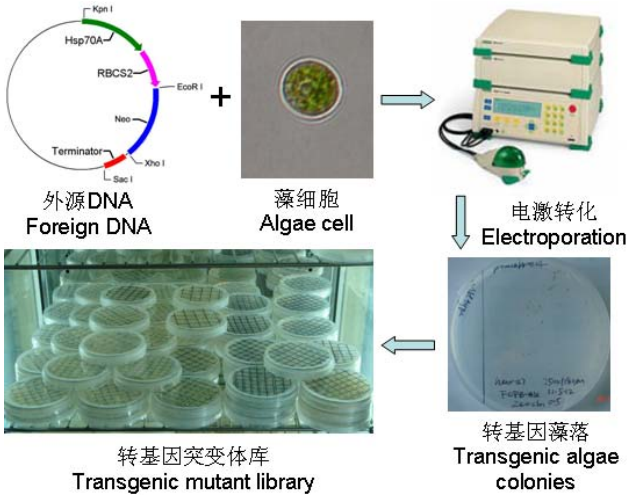

图10 高产油微藻的基因转化方法

Fig. 10 The high oil yielding algae transgenic method

4）处理电厂废气的微藻固碳技术

对藻株利用烟道气进行批次培养，经过 7 天的培养周期，比较每株藻株的生长情况，确定出适合利用烟道气培养的微藻。分析各种藻株的生长曲线，计算藻产量，推算藻株对电厂废气中二氧化碳的吸收程度。

Microalgae strains were batch cultured by flue gas. In the period of 7 days, the

growth speeds were compared and determined if the strains were suited to cultivate by flue gas. Algal color and cells were observed; algal growth curves were analyzed. CO2 emission reduction was calculated according to the algal biomass.

电厂烟道气的微藻固碳实验实现了微藻的中试规模的高密度培养，到养殖后期，藻细胞依旧健康，未发现原生动物及杂藻污染，证实燃煤电厂的烟道气十分有利于微藻繁殖。根据数据结果计算，实际干物质理论年产量可达 70Kg/m3，相当于吸收二氧化碳 140Kg，约合处理电厂烟道气 700m3。微藻对烟道气中的固体重金属颗粒有明显的富集作用，因此烟道气必须预先经过过滤处理，藻粉产品才可符合饲料与食品要求。

In the test of microalgal biofixation of CO2 from coal-fired power plant flue gas, the high density microalgal cultivation in pilot scale is achieved. At the end of test, microalgal cells were very healthy. No pollution of protozoa or other algae happened. The results show that flue gas can be utilized to grow microalgae without any treatment. According to the calculation, the theoretical annual productivity of microalgal biomass can reach to 70 Kg/m3, absorbing CO2 140 Kg; it can treat the flue gases of 700 m3. The enrichment of heavy metals from the flue gas is significant in microalgae product. Therefore, flue gas must be pre-filtered treatment and then microalgae powder can meet the requirements of feed and food products.

5）杜克与新奥对微藻固碳的合作研究

2010年杜克与新奥在美国肯塔基州的East Bend Station完成了微藻减排的初期实验，这是首次在杜克燃煤电厂使用微藻技术吸收固定烟气中二氧化碳的实验，为微藻生物能源技术放大与产业化示范的顺利推进打下了良好基础。2012年双方将在此基础上建设 1 公顷微藻生物能源工业方案示范基地，吸收电厂烟气并联产生物能源，未来更可以向杜克能源在美国的众多火电厂和电站推而广之，全面实现可持续的二氧化碳减排与资源利用。现已完成工艺流程和工程方案的设计。

Duke Energy and ENN completed the preliminary experiment of microalgal biofixation of CO2 in 2010. This was the first time that microalgae were used to absorb CO2 directly from the flue gas at a Duke Energy coal-fired power plant, which

laid a solid foundation for the technology scaling up. In 2012, a one-hectare demo project aiming at capturing flue gas and producing bio-energy will be constructed by the two companies. If successful, this solution can be deployed in more fossil-fuel power stations owned by Duke Energy in the future. The design process and engineering plans has now completed.

Task 8 模拟和评估/ Simulation and Assessment

1）MEA 吸收电厂烟气中 CO2 的系统流程模拟

主要设备、设计参数和系统流程图（图 11）：

吸收塔：3 个并列布置，直径为 9.4 米，填料段高度为 40 米，填料为 Φ50mm 鲍尔环，级数为 28。

Facilities design and parameters:

Absorbers:

3 parallel columns

Diameter: 9.4 m

Packing Section Height: 40 m

Packing: Φ50mm Pall Ring

Stages: 28

解吸塔：直径 7.5 米，高度 40 米，填料为 Φ50mm 鲍尔环，级数为 10。

Stripper:

Diameter: 7.5 m

Packing Section Height: 40 meters

Packing: Φ50mm Pall Ring

Stages: 10

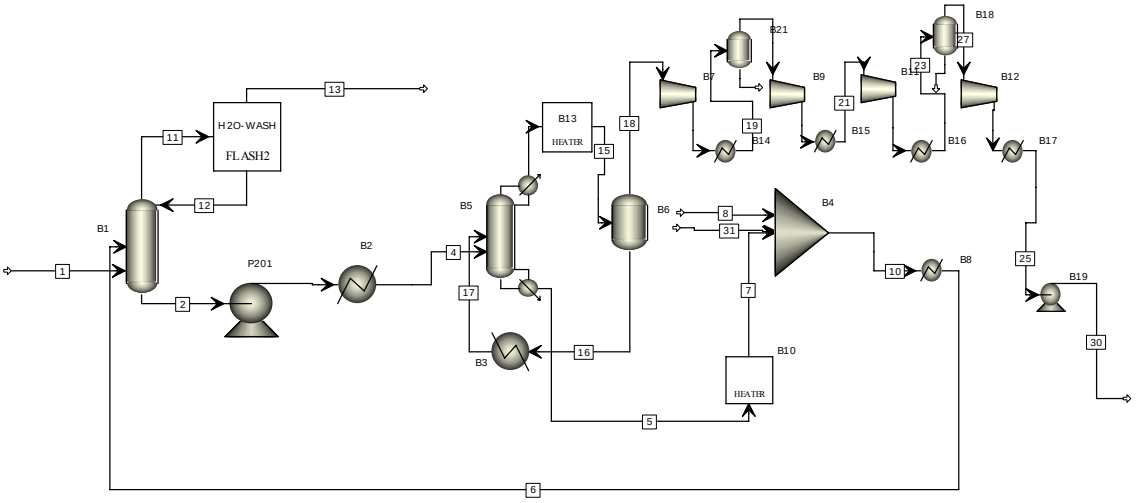

图 11 在 Aspen Plus 中实现的 CO_2 捕集系统流程图

Figure 11 Flowsheet of CO_2 capture in Aspen Plus

烟气参数依据 300MW 燃煤电厂煤耗估算

Flue gas was estimated by material balance a 300 MW coal-fired power plant

模拟结果 Simulation results

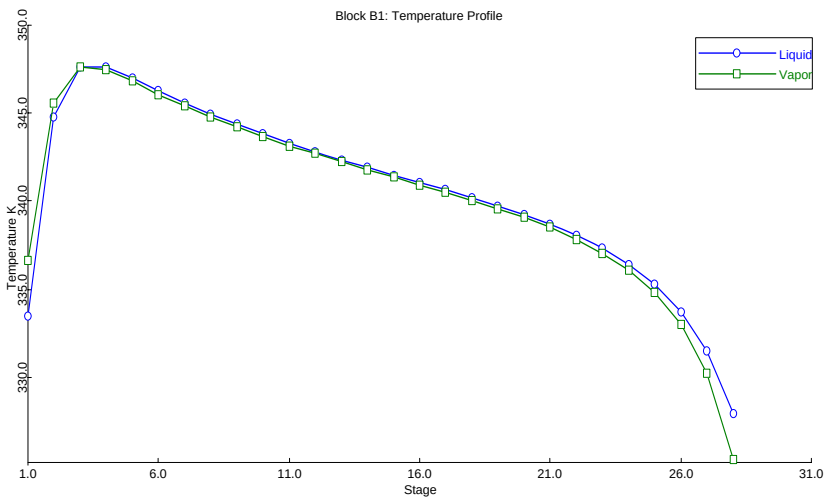

图 12 吸收塔内的温度分布

Figure 12 Temperature profile of one absorber column

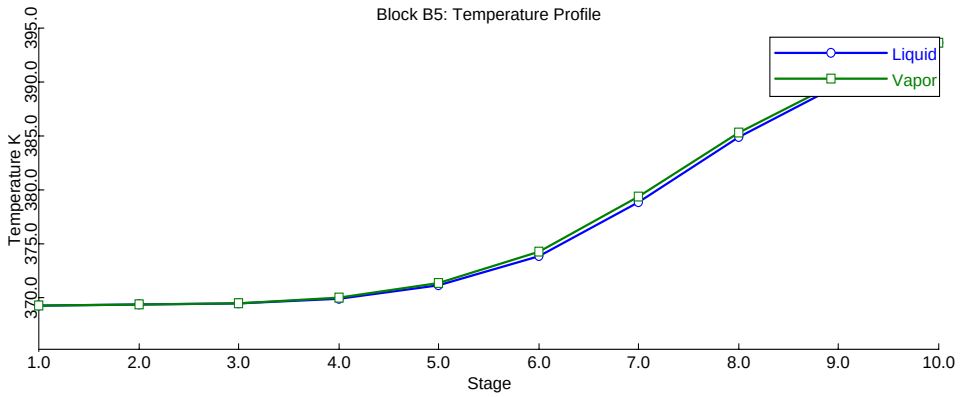

图 13 解吸塔内的温度分布

Figure 13 Temperature profile of one stripper column

2）典型超临界燃煤电厂燃烧后 MEA 吸收 CO2 的流程模拟及性能研究

流程模拟中捕集系统与燃煤电厂的系统整合方式

System Integration of capture system with coal-fired power plant in process simulation

从汽轮机低压缸抽汽送往再生塔再沸器，提供吸收剂再生所需热量；再沸器乏汽送回至汽轮机给水加热系统。

Steam extracted from LP turbine is feed to the reboiler to provide heat necessary for absorbent regeneration. The exhausted steam from reboiler returns to the feed water heating system of steam turbine.

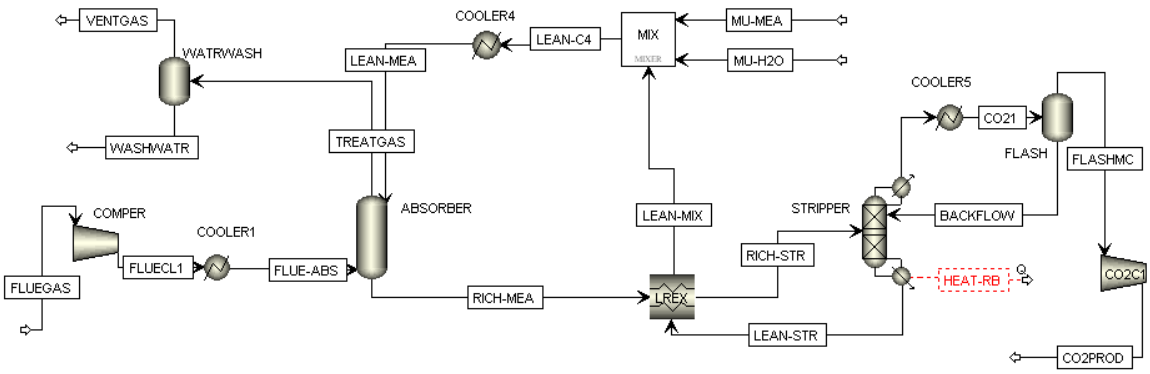

图 14 Aspen Plus 中的碳捕集系统

Figure 14 Model of carbon capture system in Aspen Plus

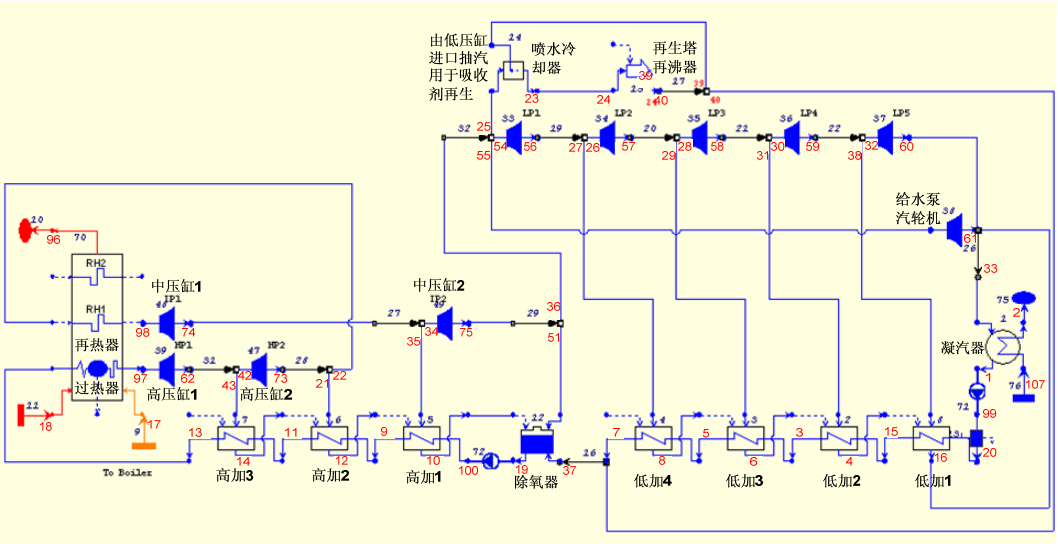

图 15 Thermalflex 中的燃煤电厂流程图

Figure 15 Model of coal-fired power plant in Thermalflex

表 5 带燃烧后碳捕集的燃煤电厂主要参数

Table 5 Main parameters of Coal-fired power plant with carbon capture

参数 Parameters	取值 Value
机组毛出力 Unit gross power	580 MWe
机组净出力 Unit net power	550 MWe
煤的热值 LHV of coal	5000 kcal/kg
锅炉进煤量 Coal to boiler	177948 kg/hr
高压缸进口压力 HP inlet pressure	24.2 MPa
过热蒸汽温度 Superheated steam temperature	593 ℃
中压缸进口压力 IP inlet pressure	4.51 MPa
再热蒸汽温度 Reheated steam Temperature	593 ℃
低压缸进口压力 LP inlet Pressure	3.04 MPa
捕碳前的烟气温度 Flue gas temperature	56.7 ℃
锅炉烟气压力度 Flue gas pressure	0.1013 MPa
烟气流量度 Flue gas flow	2012986 kg/hr
烟气成分构成 Mole fraction	
N_2	68.31 mol%
CO_2	12.80 mol%
H_2O	15.95 mol%
O_2	2.94 mol%
MEA 贫液参数 Lean MEA	
MEA 质量分数 MEA mass fraction	30 %
MEA 的负荷度 Loading factor of MEA	0.25

降低吸收反应温度、降低吸收剂贫液负荷度、增大吸收剂循环量有助于提高吸收效率。本研究中将吸收剂贫液温度和贫液负荷度分别固定在 40oC 和 0.25，通过调节 MEA 吸收剂贫液的流量来控制吸收塔的二氧化碳吸收效率。

根据再生热耗随吸收效率的变化规律，本研究选择固定吸收效率(90%)，调节烟气分流比以实现不同的捕碳率，研究了电厂净出力和净效率随捕集率的变化规律。

Lower absorption temperature, lower loading factor of lean MEA, or bigger flow rate of MEA absorbent, is helpful to improve the absorption efficiency. We set lean MEA temperature 40℃, loading factor of MEA 0.25, then manipulate the flow rate of lean MEA to control the absorption efficiency.

Choose a fixed the absorption efficiency 90% based on the relationship of regeneration heat duty and absorption efficiency, then we investigate the influence of capture rate on unit net power and efficiency by changing flue gas diversion ratio.

Task 9.1 国际交流/Communication and Integration

1）组织联盟各种会议 Organize different consortia activities

联盟组织的单边活动见表 6。

China Side ACTC activities organized are listed in Table 6.

表 6 联盟单边活动情况

序号	日期 Date	地点	会议内容/成果	参加人员
1	2011.2.13	北京	中方总体组会议/确定 Tasks	中方总体组成员
2	2011.2.27	北京	中方全体会议/讨论联盟工作计划	中方联盟全体成员
3	2011.5.24	武汉	中方总体组会议/讨论工作	中方总体组成员
4	2011.9.11	新奥	中方总体组会议/拟定工作亮点	中方总体组成员
5	2011.11.7	北京	中方全体会议/推动联盟工作	中方联盟全体人员
6	2012.2.28	武汉	中方全体会议/讨论中方年度报告	中方联盟全体成员

Table 6 China Side ACTC activities

No	Date	Place	Activities/Outputs	Attendees
1	2011.2.13	Beijing	Advisory board meeting/ Tasks determined	Advisory Board
2	2011.2.27	Beijing	All hands meeting/Work plan discussed	All from China-ACTC
3	2011.5.24	Wuhan	Advisory board meeting/ Progress discussed	Advisory Board
4	2011.9.11	ENN	Advisory board meeting/ Highlights determined	Advisory Board
5	2011.11.7	Beijing	All hands meeting/Work promoted	All from China ACTC
6	2012.2.28	Wuhan	All hands meeting/ Annual report discussed	All from China-ACTC

联盟组织的双边活动见表 7。

ACTC Two-Side activities organized are listed in Table 7.

表 7 联盟组织的双边活动

序号	日期	地点	会议内容/成果	参加人员
1	2011.2.28-3.1	北京	双边联席会议/确定合作计划	联盟双方全体成员
2	2011.3.3	武汉	美方 ACTC 访问 HUST/工作交流	联盟双方相关人员
3	2011.5.25	武汉	工作会议/讨论工作进展	联盟双方相关人员
4	2011.8.19	西弗大	TMP 签字仪式/签署 TMP	联盟双方负责人
5	2011.9.22	武汉	Dr.Marlay 访问中国/介绍联盟工作	联盟双方负责人
6	2011.9.23	北京	CERC 指委会会议/CERC TMP	双方政府联盟负责人
7	2012.2.29-3.1	武汉	双边联席会议/总结报告双方年度工作	联盟双方全体成员

Table 7 ACTC Two-Side activities organized

No	Date	Place	Activities/Outputs	Attendees
1	2011.2.28-3.1	Beijing	Joint-meeting/Work plan determined	All from two sides
2	2011.3.3	Wuhan	US-ACTC visit HUST/Communication	Some from two sides
3	2011.5.25	Wuhan	Work Meeting/Progress discussed	Some from two sides
4	2011.8.19	WVU	TMP Signing Ceremony	Leaders from two sides
5	2011.9.22	Wuhan	Dr.Marlay visited China/Discussion	Leaders from two sides
6	2011.9.23	Beijing	CERC Steering Committee	Leaders from two sides
7	2012.2.29-3.1	Wuhan	Joint-meeting/Annual report determined	All from two sides

2）交流活动

Communications

联盟间为加深合作，组织了各种层次、范围的访问和交流活动。

For better cooperation between two sides, different kinds communication activities with different forms are organized.

2011 年 7 月 1 日，中美清洁能源联合研究中心清洁煤技术联盟富氧燃烧课题在武汉华中科技大学召开了课题启动会，课题的中方各参与单位的 8 名代表，包括华中科技大学、清华大学、哈尔滨工业大学、中国电力工程顾问集团公司等，进行了讨论，并在当天晚上与美方课题牵头单位巴威公司召开了电话会议。

On July 1st, the oxy-combustion team organized a start-up meeting at HUST in which 8 team member of China side discussed their work and contacted B&W, the lead team of this task in USA, using internet video meeting. Other task teams also held different forms of task start up meeting.

3）工作简报

Newsletters

为报道联盟的动态和进展，制作了八期联盟工作简报，对联盟的主要活动和主要进展进行了报道，主要包括：

In order to report the consortium progress, 8 newsletters have been produced:

第 1 期：联盟的总体情况、构架、工作模式和课题设置

第 2 期：2011 年北京双边联席会议情况和会议成果

第 3 期：2011 年武汉知识产权专题论坛会议情况和会议成果

第 4 期：富氧燃烧课题在武汉召开的课题启动会情况

第 5 期：ACTC 联盟中方主任访问美方联盟并签署 TMP 协议

第 6 期：中方 ACTC 联盟在新奥集团召开总体组会议

第 7 期：“中美清洁能源科技合作指委会会议” 在京举行的情况

第 8 期：中方 ACTC 联盟第二次全体会议在北京召开

No. 1: Introduction to ACTC, organization, working modes and tasks

No. 2: Introduction to the 2011 Beijing Joint Meeting

No. 3: Introduction to the 2011 Wuhan IP Workshop

No. 4: Startup Meeting of Oxy-combustion team in Wuhan

No. 5: China-ACTC visited US-ACTC and signed TMP

No. 6: China-ACTC Advisory Board Meeting held in ENN

No. 7: Meeting of China-US Steering Committee on Clean Energy Science and Technology Cooperation in Beijing

No. 8: China-ACTC held plenary meeting in Beijing

4）网站

Website

建立了联盟网站，报道联盟动态，发布信息。

A website of China-ACTC has been established to share news, etc.

Task 9.2：合作中的知识产权保护问题研究

Research on the IP protection in the cooperation

1）进展（已在 TMP 中描述）

Progress (described in TMP)

此外，知识产权项目组还初步拟定了子项目知识产权协议范本，为下一步中美技术合作项目中的知识产权管理问题的研究打下基础。

In addition, IP project team also developed a preliminary model for project based IP Agreement, which made a foundation for further research on IP management issues between technical sub projects.

2）合作情况

Collaboration work

在 TMP 文本共同修订、磋商、谈判的整个过程中，中美双方 IP 项目组本着鼓励中美科技交流、数据共享、激发创新的目的，在推动研发合作和技术创新的同时，保护知识产权、促进技术转移、提升技术收益，展开了积极有效的合作。这为后续中美 ACTC 联盟及其下属 8 个子项目组的科技合作构建了可靠的知识产法律框架；搭建了互助互惠、利益共享的合作平台；为中美双方知识产权工作组在参与中美 ACTC 联盟后续 8 个子项目组的合作、更好地服务于 8 个子项目组的成员的知识产权创造、运用、保护和管理，打下了坚实基础。

The US and China IP project team had a very positive and effective cooperation throughout the process of TMP revision, consultation and negotiation. The cooperation is aiming at encouraging technology exchange , data sharing and stimulating innovation, promoting R&D cooperation and protecting intellectual property rights, accelerating technology transfer and upgrading earnings. It established a reliable legal framework for intellectual property protection. It build a mutual support and benefit-sharing platform for cooperation. It settled a solid foundation for a better cooperation between IP project team and other 8 technical project team in ACTC. It enabled IP project team better serve the other 8 technical project team on IPR creation, utilization, protection and management.

三、合作亮点

Highlight Achievements

中美清洁能源联合研究中心清洁煤技术联盟成立以来，双方的合作在有序开展，在有些合作研究领域初步呈现出了近期可望取得阶段性成果的潜在亮点，如：整体煤气化联合循环及燃烧前二氧化碳捕集技术、燃烧后二氧化碳捕集技术、微藻固碳技术、CO_2 地质封存技术、富氧燃烧技术的合作。这些内容涵盖 CCUS 的“碳捕集—碳利用—埋存”三个关键技术领域，中美双方的科学家在联盟确定的合作项目框架下，围绕中美的大型示范项目（如 250MW 绿色煤电 IGCC 项目—632MW Edwardsport IGCC 项目、Gibson 电厂百万吨/年燃烧后碳捕集项目、East Bend 电厂—新奥微藻固碳中试示范项目、鄂尔多斯直接液化十万吨级二氧化碳

咸水层埋存等）开展合作研究，部分领域实现了对美的技术输出可行性（如燃烧后捕集）或在美进行技术示范（如微藻固碳）。

Collaboration between the Chinese and US teams has been carried out since the foundation of the CERC-ACTC, and highlight achievements are expected from the collaboration in the near future, such as collaboration in IGCC (Integrated Gasification Combined Cycle) and pre-combustion carbon capture technology, post-combustion carbon capture technology (PCC), CO_2-Algae biofixation technology, CO_2 geological sequestration technology, oxy-combustion technology, etc., which cover the three key areas, carbon capture, carbon utilization, and CO_2 sequestration related to CCUS. Under the collaboration framework determined by CERC-ACTC, the scientists in both sides are carrying out the collaboration related to large scale demonstration projects (e.g. 250MW Green Coal Gen. IGCC – 632 MW Edwardsport IGCC project, Gibson power plant Mton/yr post-combustion carbon capture project, Duke Energy's East Bend power plant – ENN using microalgae to fix carbon dioxide and transform the algal biomass into a sustainable source of renewable energy, Ordos saline aquifer CO_2 storage of 0.1 Mton level by direct liquefaction, oxy-fuel combustion carbon capture, etc.), and in some areas technology transport to the US (post-combustion capture) or technology demonstration in the US (microalgae carbon dioxide fixation) is realized.

1. 整体煤气化联合循环及燃烧前二氧化碳捕集技术的合作

1. Collaboration in IGCC and pre-combustion carbon capture technology

作为中美两国最大的能源电力企业，中国华能集团与美国杜克能源公司在中美清洁能源联合研究中心框架下，将深入开展能源领域技术联合研究工作。在两企业间多项能源合作研究中，整体煤气化联合循环 IGCC（Integrated Gasification Combined Cycle）和燃烧前二氧化碳捕集技术 CCS（Carbon Capture and Storage）作为中美两国实现温室气体减排和煤炭高效清洁利用的关键与前沿技术，有着极为重要的合作研究意义。

As the largest energy power enterprises in China and U.S., China Huaneng

Group and US Duke Energy, Inc. will promote the technology joint research work in energy field under the framework of CERC-ACTC. As the key and frontier technology of realizing the greenhouse gas emission reduction and high efficiency and clean utilization of coal, IGCC and pre-combustion technology of CCS is very important in the collaboration researches between the two countries.

IGCC 发展和使用还处在早期阶段，研究发展 IGCC+CCS 技术对中美两国都有非常重要的意义。中国华能集团是国内最早提出开展 IGCC 技术开发和示范的企业。在国家“十一五”863 计划的重大项目的支持下，中国华能集团正在天津临港工业园区内建设国内首台 250MWe IGCC 示范工程，将于 2011 年末建成投产。同时，美国杜克能源公司正在印第安纳州建设 632MWe 的 Edwardsport IGCC 电厂，将于 2012 年投入运行。中美两国研究工作者将针对华能集团“绿色煤电”和杜克能源公司 Edwardsport 重大项目及其中先进技术开展联合研究，对稳态、瞬态性能及关键操作运行原则进行示范验证和数据收集，通过运行经验交流和数据共享，共同掌握 IGCC 电厂完整的运行和评估方法。同时，基于以上两个 IGCC 电厂，开展二氧化碳捕集技术研究，并建立研发测试平台，进行基于 IGCC 的 CO_2 捕集、利用与封存技术研发和示范。

The development and utilization of IGCC is still in its initial stage and the research in developing IGCC + CCS technology is of great importance to the two countries. China Huaneng Group is the enterprise that firstly proposes to develop and demonstrate the IGCC technology. With the support of the national “Eleventh Five-Year” 863 key project plan, China Huaneng Group is constructing the first China’s 250MWe IGCC demonstration project in Tianjin Harbor Industrial Park, which will be completed at the end of 2011. At the same time, US Duke Energy, Inc. is constructing 632MWe Edwardsport IGCC power plant in Indiana State, which will be put into operation in 2012. US-China researchers will carry out the joint research focusing on the Huaneng Group “Green Coal”, Duke Energy Edwardsport major project and the related advanced technology. They will perform the demonstration validation and data collection of the steady-state and dynamic performance and the key operation principles, so as to master the complete operation and evaluation methods through the exchange of operating experience and data sharing. In the

meantime, based on the above two IGCC power plants, they will perform the research of CCS and construct the R&D test platform, so as to conduct the R&D demonstration of the CO_2 capture, utilization and storage basing on IGCC.

2. 燃烧后二氧化碳捕集技术的合作

2. The collaboration in the post-combustion carbon capture (PCC) technology

燃烧后二氧化碳捕集技术（PCC 技术）的规模化发展既在技术上存在复杂性又在一定程度上受到经济性的制约，进一步完善 PCC 技术并提高该技术应用后的经济效益就成了两国及电力企业共同关注的重点。在二氧化碳减排方面，杜克能源公司与中国华能集团清洁能源技术研究院（以下简称“华能清能院”）合作，在美国印第安纳州欧文斯威尔的 Gibson 电厂三号发电机组进行一项分两阶段的燃烧后二氧化碳捕集项目。双方合作项目的第一个阶段包括工程设计及前期可行性研究，从而了解项目的经济效益，并为实现每年从 Gibson 电厂三号机组（635MW）尾部烟气中捕集一百万吨/年左右的二氧化碳并完成必要的工程设计；研究将提出几种不同的捕集后二氧化碳的使用方案，以及每种方案的经济效益和可行性。该合作项目将采用华能清能院自主开发的燃煤烟气燃烧后二氧化碳捕集技术（PCC）进行 Gibson 电厂三号机组二氧化碳捕集装置前期可行性研究工作，目前可研前期技术评估工作已经有序展开。

The scale development of PCC technology is not only complex in the technology, but also constrained by economics. How to further improve the PCC technology and enhance the economic benefits of the application is the common focusing point between the two countries and the power companies. To reduce CO_2 emission, Duke Energy, Inc. is collaborating with Huaneng Clean Energy Research Institute (CHNG-CERI) for a two-stage PCC project for the No.3 unit of Gibson power plant in Owensville, Indiana. The first stage of the collaboration includes the design of the project and the pre-feasibility study, so as to understand the economic benefits of the project, and to complete the engineering design of achieving the target that capture about 1 million tons/year CO_2 from the flue gas of No.3 unit of Gibson power plant per year. The research will provide several different proposals of CO_2 utilization after

capture, and the economic benefit and feasibility of each option. The collaboration project will use the PCC technology self-developed by CHNG-CERI to conduct the pre-feasibility study of the CO_2 capture in unit No.3 of Gibson power plant.

3. 微藻固碳技术合作

3. The collaboration in the carbon dioxide fixation using microalgae

微藻具有生长速度快、对土地要求低、含油量高（是大豆的 90 倍）、吸碳能力强（约为林木的 5-8 倍），产品组合广泛等优势。

Microalgae has a lot of advantages, such as high growth rate, low land requirement, impressive high oil productivity (about 90 times of soybean), high carbon mitigation capacity (about 5-8 times of equivalent forest), and broad product portfolio, and so on.

新奥作为中国最先推进微藻固碳生物能源产业化的企业与美国最大的电力企业杜克能源公司，在中美清洁能源联合研究中心框架下，将依托两公司的微藻研发与示范平台，在微藻减排工、农业二氧化碳并资源化利用领域深入开展联合研究。在当前尚缺乏低成本二氧化碳捕集与资源化利用技术的国际环境下，新奥集团与杜克能源公司的联合研究，将加速该项技术的成果转化，为中美乃至世界二氧化碳减排与综合利用事业开辟一条可持续的崭新途径。

ENN Group Co., Ltd. (hereinafter referred to as “ENN”), the first company in exploring carbon sequestration with microalgae and a leading company in clean energy in China, will cooperate closely with Duke Energy Corporation (hereinafter referred to as “Duke Energy”)., the largest power company in the United States, to reduce CO2 emissions via CO2 utilization under the framework of US-China Clean Energy Research Center. There is no mature low-cost technology for carbon capture and sequestration (CCS) or carbon capture and utilization (CCU) yet, their cooperation will accelerate the commercialization of industrial technology of CO2 biofixation and utilization with microalgae, and open up a new sustainable way for CO2 emissions reduction and utilization, which will prove beneficial to both the United States and China.

该合作项目的研究重点是集中解决微藻固碳技术产业化放大过程中的关键问题，双方科研人员将以示范基地为依托，对高产藻种、工业化反应器、规模化养殖等产业化关键技术进行联合开发，对藻油湿法提取、生物航油炼制、经济技术模型等产业化应用难题开展合作研究，形成完善的微藻固碳产业化技术，以应对共同的挑战。

The joint project will focus on exploring critical challenges in the scale-up and process development of CO2 utilization with microalgae. Both sides will work closely on algae strain isolation and selection, industrial photobioreactor design, large-scale microalgal cultivation, post processing technologies, such as lipid extraction, biodiesel and jet fuel synthesis, and techno-economic modeling and analysis, to develop and integrate a comprehensive microalgae CO2 biofixation and utilization technology to address the common environmental challenges.

微藻固碳技术在利用微藻减排二氧化碳的同时，可产出能源或饲料等产品。该项技术的联合研究，对饱受减排及能源匮乏压力的中美两国都具有举足轻重的意义。新奥集团是中国二氧化碳资源化利用领域的典型代表，在科技部、发改委和能源局的支持下，依托国家重点实验室和廊坊中试实验基地，开发出微藻固碳成套技术，已在中国成功实现微藻固碳与天然气电厂对接，在杜克能源 East Bend 电厂完成微藻固碳与燃煤电厂对接，并正在建设产业化技术示范基地和能源生态城。同时，新奥与杜克能源公司还将在 East Bend 电厂和北卡罗莱纳州实践“微藻减排工业方案”和“微藻减排农业方案”。所建技术示范基地兼具成果展示及科研应用功能，将为微藻固碳产业化技术创新提供广阔的实践平台。

Microalgae biofixation technology can not only reduce the CO2 emissions, but also produce biofuels, such as biodiesel and jet fuels. This joint project is of great significance to the U.S. and China, both of which are under high pressure of CO2 emissions reduction and energy shortness. As a leading company in CO2 utilization with microaglae in China, ENN has developed a proprietary microalgae biofixation thechnology leveraging the resources in the Key Laboratory of Coal-based Clean Energy and the pilot plant in ENN (Langfang, Hebei) with the support of The

Ministry of Science and Technology (MOST), National Development and Reform Commission (NDRC), and National Energy Administration (NEA). Large-scale microalgae cultivation systems were successfully coupled with a coal-based chemical plant in China and the East Bent Station power plant in the U.S., the latter of which was collaborated with Duke Energy. Now ENN is constructing a microalgae industrialization demonstration base in Inner Mongolia, China and an Eco-city in Langfang, China. In the meantime, ENN and Duke Energy will employ the microalgae biofixation technology in East Bend Station and North Carolina to examine their "industrial CO2 reduction scheme" and "agriculture CO2 reduction scheme", respectively. Both demonstration bases will not only be used as an exhibition center, but also be served as a platform for further development and innovation of microalgae CO2 fixation and utilization technology.

目前，新奥集团与杜克能源公司在清洁能源和二氧化碳资源化利用领域的全面合作已有序展开，形成了完整的工作机制：每月举行两次电话会议、双方已进行多次互访、并完成了工作对接。双方的微藻项目人员正在积极开展杜克East Band 电厂减排项目Ⅱ期（1 公顷）工程设计和Ⅲ期（50 公顷）总体规划工作。

The cooperation between ENN and Duke Energy in clean energy and CO_2 utilization has been initiated and is under way in an orderly manner. A collaboration working mechanism was developed: two telephone conferences between the two sides have been held every month, and mutual visit done periodically. Both parties are actively engaged in the designing of the power plant CO_2 emissions reduction projects (phase I: 1 ha, phase II, 50 ha) at East Bend Station in the U.S.

4. CO_2 地质封存技术的合作

4. The collaboration in the CO_2 geological sequestration technology

相对捕集与输运技术而言，地质封存的安全性及经济性很大程度上取决于场地条件，封存场地的评价与合理选择是 CCS 实施的基础和成败关键。据初步调

查，中国的鄂尔多斯盆地、美国的 Illinois 盆地等目标研究区排放源多、封存容量大，封存方式多样、勘探程度较高，分别是中美两国最适合开展大规模 CCS 项目的盆地之一。作为潜在大规模示范封存场地，对其封存潜力与适宜性进行更详细评价是进一步开展 CCS 工程设计和实施的必然要求。

Compared with the capture and transportation technology, the safety and economy of the geological sequestration depends largely on the field condition. The evaluation and the rational selection of the sequestration site are critical for the CCS implementation. Based on the preliminary survey, Ordos Basin and Illinois Basin are the target basins for large scale CCS projects in China and US respectively, since they both have the features as plenty emission sources, large storage capacity, lots storage diversities and the high exploration level. Due to their potentials in large scale demonstration field for carbon storage, it is necessary to further evaluate the storage potential and the suitability for the further CCS project design and implementation.

CO_2 地址封存项目中方由中国神华煤制油化工有限公司和中国科学院武汉岩土力学研究所牵头，参加单位有清华大学、中国矿业大学、陕西省能源化工研究院、延长石油集团有限责任公司。美方牵头单位是西弗吉尼亚大学，参加单位有劳伦斯利物莫尔实验室(LLNL)、印第安纳地质调查局(IGS)、拉斯阿拉莫斯实验室(LANL)、怀俄明大学(UW)、怀俄明地质调查局(WSGS)、国家能源技术实验室(NETL)、太平洋国家能源实验室(PNNL)等。

The project of the CO_2 geological sequestration site is led by CSCLC and Institute of Rock and Soil Mechanics in China with the attending units of THU, CUMT, ISECE and YCP. In US, the project is led by WVU and the attending units are LLNL, IGS, LANL, UW, WSGS, NETL and PNNL.

双方正在进行以下合作：（1）地质对象研究，分别以中美两国数个典型沉积盆地为研究对象，对比分析各自的地质条件并评价其封存 CO_2 的潜力。双方通过合作，完善封存量、安全性分析等评估方法和技术。（2）封存方式研究，包括提高石油采收率、提高煤层气采收率和咸水层的封存。对两国已有的示范项目成果和经验进行交流，特别是借鉴美国在 CO_2 提高石油采收率的经验和教训，为在中国鄂尔多斯盆地建立示范项目提供技术支持；结合双方已有的咸水层封存示

范项目，深化咸水层封存 CO_2 的理论并掌握相关关键技术，为示范工程的建设和运行提供技术支持；对比双方已有的注入 CO_2 提高煤层气采收率示范项目，对煤层封存 CO_2 的可行性进行深入分析，客观认识煤层封存 CO_2 对减排的贡献。

The ongoing collaboration is focused on the following field. (1) Geological research; the research target is the typical sedimentation basins in China and US. The geological condition will be analyzed comparatively and the CO_2 storage potential will be evaluated. Based on the collaboration, the evaluation methods of the storage capacity and safety will be improved. (2) Storage method, including enhancing oil recovery, enhancing coal bed gas recovery and salty water level storage. The results and experience will be shared from the previous projects, especially experiences and lessons from the oil recovery projects of the US CO_2 enhancing, to technically support the demonstration project in Ordos Basin in China. The existing demonstration projects in salty water level storage in both countries will be combined to further develop the theory of CO_2 storage by salty water level and master the key technology to provide the technical support to the demonstration project construction and operation. The existing projects about the enhancing coal bed gas recovery by CO_2 injection will be compared to further analyze the feasibility of CO_2 storage in the coal bed and recognize the contribution of the CO_2 storage in the coal bed to the emission reduction.

在项目的第一阶段，将以中国的沁水盆地和鄂尔多斯盆地，美国的 San Juan 盆地、Wyoming 盆地、Illinois 盆地和 Indiana 等地区为研究对象，分别开展煤层、咸水层和油田封存潜力评估以及适宜性区块的优选，并对 CO2－EOR 的技术方案展开探索，为后续研究和工程示范奠定基础。

In the first step of the project, the Qinshui Basin and Ordos Basin in China, the San Juan Basin, Wyoming Basin, and Illinois Basin and Indiana area in the US are the research targets. The storage potentials of the coal bed, the salty water level and the oil field will be evaluated and the suitability fields will be compared. The research about the CO_2-EOR technical scheme will also be carried out which will lay the foundation for further research and demonstration projects.

5. 富氧燃烧碳捕集技术的合作

5. The collaboration in the Oxyfuel combustion and carbon capture technology

富氧燃烧是一种有望快速实现商业化的燃煤发电碳捕集技术，由华中科技大学牵头的中方团队和由巴威公司牵头的美方团队，正分别在中国和美国开展富氧燃烧的示范工程建设，中方正在湖北应城建设国内第一套 35MW 的富氧燃烧示范工程，并着手开展更大容量工业示范装置的可行性研究和概念设计；美方则将在伊利诺伊州建设全世界首套 200MWe 规模的富氧燃烧碳捕集与埋存示范工程，双方都面临着工业化前期共同的技术挑战。

The oxyfuel combustion is a kind of carbon capture technology in coal combustion power plant which has a potential for quick commercialization. The Chinese group led by HUST and the US group led by B&W are working on the demonstration projects of the oxyfuel technology in China and US respectively. In China, the Chinese group has started to construct the first 35MW oxyfuel combustion demonstration project in Yingcheng, Hubei, while the US group will construct an oxyfuel combustion, carbon capture and carbon storage demonstration project in Illinois, which is the first 200MWe project in the world. So both groups will face the similar technical challenges at the initial step of the industrialization.

围绕富氧燃烧技术，包括中方华中科技大学、清华大学、哈尔滨工业大学、中国电力工程顾问集团公司和美方巴威公司、西弗吉尼亚大学等的联合团队将开展四个方面的合作研究：燃料特性和燃烧动力学；小试规模富氧燃烧台架试验及优化；静态和动态过程模拟；大规模/商业规模工程可行性研究。在前两年的合作研究中，双方将筛选典型的中国煤种，开展着火、燃烧、燃尽、积灰/结渣、颗粒物、NOx/SOx、Hg 等生成特性的基础试验；开发可用于富氧燃烧过程数值预报的焦燃烧与气化数学模型；将新开发的数学模型嵌套入各自的自主程序并对小试台架的试验开展数值预报和模拟等。

About the oxyfuel combustion technology, the Chinese group, including HUST, THU, HIT and CPECC, and the US group, including B&W and WVU will collaborate in the following four fields: fuel characteristics and combustion dynamics, small scale oxyfuel combustion test and optimization, steady and dynamic state process

simulation and large scale/commercial scale feasibility study. In the first two years of collaboration, both groups will select typical Chinese coals and then start the basic experimental research on the coal ignition, combustion, burn off, dust stratification, slagging, particles, characteristics of NOx/SOx and Hg formation. The mathematical models will be developed for predicting the data of coke combustion and gasification in oxyfuel combustion. The newly developed mathematical models will be combined into the independent individual programs to simulate and predict the data for the bench scale experiments.

有关工作将为相关示范工程的实施和运行提供直接的指导，有力地推动富氧燃烧技术的商业化进程。

The related work will directly guide the demonstration projects and significantly promote the commercialization of the oxyfuel combustion technology.

四、下年度计划

Plan of Next Year

(1) 完善双方课题组之间的知识产权协议

Establish IP agreements between the individual task groups of the two sides

(2) 切实推进各项工作

Make essential progress in each task

(3) 制定各任务下年度计划并凝练重点亮点

Plan next year work and extract key points and highlights in each task

(4) 争取各亮点取得突破性的进展

Make essential progress in each highlighted task

(5) 深化双方合作交流

Ensure better collaboration and communication between the two sides

1．完善课题组知识产权协议

Establish IP agreements between the individual task groups

《技术管理计划（TMP）》的签署只是知识产权项目工作的一个开始，随着中美清洁能源清洁煤联盟科技合作的启动，还有大量的工作等着我们开展。比如，在项目合作开始前，界定中美双方所有合作成员单位各自已经拥有的知识产权，避免日后纠纷；协商签署知识产权协议和保密协议，约定每个子项目合作期间由双方合作完成的研究开发成果的知识产权归属及利用方式、技术成果应用和许可使用收益的分享；运用专利信息分析技术，引导合作研究向正确的方向开展、避免重复研究开发和无效的投入；及时合理地将合作研究开发项目的成果及时进行知识产权保护和管理；运用知识产权战略，积极规划、布局并构筑专利网，积极申请国际国内行业技术标准等。这些都将在下一年度开展并逐步完成。

"Technology Management Plan (TMP)" is a good start of IP project work. With the US-China CERC-ACTC technical projects' commencing, a lot of work needs to be carried out. For example, before the start of the project cooperation, defining background IP of all members of the cooperative entities is very important. It can help avoiding potential disputes. Negotiation and signing IP agreements and confidentiality agreements are necessary, all right produced in project collaboration shall be allocated and exploited properly. Guiding collaborative research direction by analyzing patent information, avoiding duplication of R&D and invalid inputs, timely and efficiently using IP management method and strategies to protect output of cooperation, and actively planning, layout and building a proprietary network, and actively applying for international and domestic industry technical standards, etc., all of these will be carried out in the next year and gradually completed.

2．切实推进各项工作（见各任务年度报告）

Make essential progress in each task (See task annual report)

3．深化双方合作交流

Ensure better collaboration & communication between the two sides

1）开好本次会议；

A successful meeting of today is a good start;

2）筹备在美召开下届双方联席会议，对计划落实情况进行讨论，解决可能遇到的问题；

Prepare next joint meeting in USA. Discuss how the work plan is executed and possible problems.

3）项目组之间进行互访，促进合作的进行。

Mutual visit between each task group of the two sides

4）丰富双边交流方式

包括专题研讨、视频会议、研究生联合培养、短期工作访问等

Apply different forms of communication

Including special discussion, video meeting, student exchange, visiting scholar exchange, etc

清洁煤技术联盟

2012.2.28

附录 1 / Annex 1

中美清洁能源联合研究中心
Clean Energy Research Center

清洁煤技术(包括碳捕集和封存)联盟
Advanced Coal Technologies Consortium

课题工作对接计划
Cooperation Working Plan for Each Task

2011-05-25

目　录

Content

任务 1：先进发电技术

Task1: Advanced power generation

任务 2：煤炭清洁转化技术

Task 2: Clean Coal Conversion Technology

任务 3-5：碳捕集技术联合工作方案

Task 3-5: Joint Working Plan of Carbon Capture Technology Development

任务 6: CO2 地质封存场地评价技术

Task 6：Evaluation technology of CO2 geological storage sites

任务 7：二氧化碳资源化利用 - 微藻固碳和生物能源

Task7: Carbon Dioxide Utilization with Microalgae

任务 8：系统集成、模拟和评估

Task8: Systems Integration, Simulation and Assessment

任务 9.1：国际交流与综合

Task9.1: Communications and Integration

任务 9.2：合作中的知识产权保护问题研究

Task 9.2：　Research on the IP protection in the cooperation

任务 1：先进发电技术

Task1: Advanced power generation

任务摘要

Summary (200~300 words)

课题针对提高效率和减少碳排放的先进发电技术开展研究，包括 IGCC 的气化炉模型、整体模型、优化设计方案、优化控制以及适合于 IGCC 的气化技术等；同时以下一代超 700℃的 1000MW 超超临界锅炉为对象，进行炉内燃烧、传热、炉内积灰结焦特性、整体锅炉模型、热力系统优化等的研究；针对现役电厂在 CO_2 减排和提高效率的潜力、技术措施进行综合研究和分析评价，以提供相应的节能减排技术路线和工程示范。

Advanced power generation technologies, including IGCC, USC and in-service power plant retrofitting for joining efficiency increase and carbon emission reduction were proposed. For IGCC technology, a gasifier model, IGCC integrated system model, optimization system, advanced control system for a IGCC plant and gasification technologies appropriate for IGCC technology were proposed. And a fundamental research of coal combustion, heat transfer, ash fouling and slagging in the furnace for USC boiler of 700℃ main steam will be conducted, then integrated dynamic model, thermal system optimization will further be developed. As for in-service power plant, the potential and technologies of efficiency increase and carbon emission reduction will be evaluated, which will lead to demonstration and application.

1. 任务背景

Introduction

先进发电技术在以煤为主的能源结构中，对于减少 CO_2 排放具有重要的意义。IGCC 技术能够实现 CO_2 的近零排放，是未来煤基能源系统的核心技术和重要基础之一。2009 中国燃煤发电厂用煤量为 13.53 亿吨，平均供电煤耗 341g/kWh，而超超临界机组的供电煤耗为 297g/kWh，预计 700℃超超临界机组煤耗可降低到 265g/kWh, 而美国 2009 年用于发电的煤为 10.42 亿吨，平均供电煤耗为 370g/kWh ，以 2009 年为基准，若供电煤耗减少 1g//kWh，则中美两国可相应减少 1000 万吨和 750 万吨的 CO_2 排放量。因此，针对下一代高参数超超临界锅炉以及对现役电厂节能减排技术的研究对于 CO_2 的减排具有重要的意义。

It is of great significance to reduce carbon emission by developing advance power generation technologies, for the coal dominant energy system. IGCC technology could realize the CO_2 free emission in a coal power plant. It is a core technology and an important base on the coal energy system in the future. In 2009, there have 1.35 billion tons of coal consumed by the power plants, and the average coal consumption rate reduced to 349 g/kWh while 297 g/kWh for USC unit in China. Correspondingly, 1.04billion tons of coal was consumed by power plant and the average coal consumption rate was 370 g/kWh. Therefore, if the coal consumption rate reduces 1g/kWh, the CO_2 emission will reduce 10 and 7.5 million tons in China and US in 2009. Consequently, it is indispensable to the super USC technologies and in-service power plant retrofitting for energy efficiency increase and emission reduce.

2. 任务目标

Objectives

通过本项目的研究，将完成以下的目标：

（1） 建立完整的 IGCC 电站工艺系统以及优化系统的计算模型；提出具有工程实用性和通用性的 IGCC 电站整体系统设计方法和设计技术；优化 IGCC 系统动态控制方案；获得适用于 IGCC 系统的气化技术。

Build a process model for the whole IGCC plant and its optimization process. Provide the engineering design model for the whole IGCC plant. Optimize the dynamic control system for the whole IGCC plant. Obtain the gasification technologies for the IGCC.

（2） 研究大容量高参数锅炉燃烧与传热模拟, 探讨超 700℃超超临界锅炉炉内燃烧与传热特性, 建立超超临界锅炉的积灰预测模型，提供颗粒物脱除和沉积防护的科学依据。

Research on combustion and heat transfer characteristics of large capacity and high parameters boiler. Study on combustion and heat transfer characteristics of super 700 ℃ USC boiler. Establish the prediction model for ash deposition, provide quantitative data for fine particle removal and ash deposition prevention.

（3） 获得不同炉型、容量以及煤种的现役燃煤发电厂的提高效率及减少 CO_2 排放的潜力；评价适用于现役电厂的节能减排的技术方案，从而获得现役电厂的改造技术路线图；获得关键技术的工程示范经验。

Obtained the detailed data of increasing efficiency and carbon reduction for different boiler types, load and coal types in-service power plants. Evaluate the retrofitting technologies, and obtain the technological roadmap for increasing efficiency and pollutant emission reduction. Obtained the retrofitting and operation experience of key technologies.

3. 任务研究内容

Statement of Work (SOW)

（1） 整体煤气化联合循环发电：

Integrated coal gasification combined cycle：

- ◆ 煤气化炉工艺模拟
  Coal-gasifier process simulation；
- ◆ 煤气化与 IGCC 联合循环整体模型与设计工艺包
  Integrating of the gasifier and IGCC and process design；
- ◆ IGCC 工艺系统优化方案研究
  Study on the integrated process optimization of IGCC system；
- ◆ IGCC 工艺系统动态调节控制方案
  Study on the dynamic control optimization of the IGCC system；
- ◆ 适用于 IGCC 的气化技术研究：
  Gasification technology evaluation and research for IGCC；

（2） 高参数超超临界发电技术：

Advanced Ultra Supercritical power generation：

- ◆ 1000MW 超超临界锅炉炉膛燃烧及传热计算
  Furnace combustion and heat transfer of 1000MW USC boiler；

◆ 超 700℃超超临界锅炉炉膛燃烧及传热计算
Furnace combustion and heat transfer of super 700℃ USC boiler；

◆ 超超临界锅炉炉内和锅内耦合特性研究
The coupling characteristics between the furnace and the pipe of USC boiler；

◆ 超超临界发电燃烧技术及积灰结渣特性研究
Combustion, fouling and slagging issue related to the USC boiler；

（3） 现役电站提高效率和减排技术:
Efficiency improvement and reduction of carbon of power plant in service：

◆ 中美两国现役电站效率提高和减排二氧化碳能力分析
Analysis of the potential of efficiency improvement and carbon reduction；

◆ 中美两国现役电站增效和减排技术的评价
Technologies evaluation of the power plant in service；

◆ 关键技术的示范，如先进低 NO_X 燃烧器、新一代 USC 高温材料等
Engineering demonstration for key technologies, i.e. advanced low NO_X burner, boiler materials for USC；

4. 任务组织

Project Organization

任务 task		Subtask1	Subtask2	Subtask3
清华大学⊗ THU	姚强 Yao Qiang ⊗ 卓建坤 Zhuo Jiankun	×	×	⊗
上海交大 SJU	张忠孝 Zhang Zhongxiao		⊗	×
哈尔滨工业大学 HIT	孙绍增 Sun Shaozeng		×	×
浙江大学 ZJU	骆仲泱 Luo Zhongyang 王勤辉 Wang Qinhui	×	×	×
中国科学院 CAS-CEP	肖云汉 Xiao Yunhan	⊗		
华能集团 HuaNeng CERI	许世森 Xu Shisen 徐跃 Xu Yue	×	×	×
中国电力投资集团公司 CPI	米文真 Mi Wenzhen 黄国芳 Huang Guofang	×	×	×
中国电力顾问公司 CPECC	董斌 Dong Bing	×	×	×
神华集团 ShenHua	任相坤 Ren Xiangkun	×	×	×
B&W	Kevin J. McCauley	×	⊗	×
LP Amina		×	×	×
Duke Energy		×	×	⊗
Alstom		×	×	×
GE		⊗	×	
AEP		×	×	×
NETL		×	×	×

注：⊗子任务负责 ×子任务参加

5. 任务研究计划（包括年度计划）

Project Schedule

本课题的三个项目的研究计划分别如下：

（1） IGCC 模拟和优化
Integrated coal gasification combined cycle

ID	Subtask1: IGCC	2011年				2012年				2013年				2014年			
		Q1	Q2	Q3	Q4	Q1	Q2	Q3	Q4	Q1	Q2	Q3	Q4	Q1	Q2	Q3	Q4
1	**Coal-gasifier process simulation**																
2	**integrating of the gasifier and IGCC and process design**																
3	**study on the integrated process optimization of IGCC system**																
4	**study on the dynamic control optimization of the IGCC system**																
5	**Gasification technology evaluation and research for IGCC**																

（2） 高参数超超临界发电技术

Advanced Ultra Supercritical power generation

ID	Subtask2: USCC	2011年				2012年				2013年				2014年			
		Q1	Q2	Q3	Q4	Q1	Q2	Q3	Q4	Q1	Q2	Q3	Q4	Q1	Q2	Q3	Q4
1	furnace combustion and heat transfer of 1000MW USC boiler																
2	furnace combustion and heat transfer of super 700℃ USC boiler																
3	the coupling characteristics between the furnace and the pipe of USC boiler																
4	combustion , fouling and slagging issue related to the AUSC																

（3） 现役电站提高效率和减排技术

Efficiency improvement and reduction of carbon of power plant in service.

ID	Subtask3: retrofitting at the in-service power plant	2011年				2012年				2013年				2014年			
		Q1	Q2	Q3	Q4	Q1	Q2	Q3	Q4	Q1	Q2	Q3	Q4	Q1	Q2	Q3	Q4
1	analysis of the potential of efficiency improvement and carbon reduction																
2	technologies evaluation of the power plant in service																
3	Engineering demonstration for key technologies																

6. 合作基础与合作能力

Personnel, Facility and Equipment

中方的项目承担单位由国内 9 家高校、研究机构和相关企业组成，分别是清华大学、浙江大学、上海交通大学、哈尔滨工业大学、中国科学院、中国华能集团清洁能源技术研究院、中国电力投资集团公司、中国电力工程顾问集团公司和神华集团。项目成员以国家、教育部重点实验室为依托，拥有具有国际先进水平的实验和测试平台，包括丝网反应器、多元扩散燃烧器、高温一维炉、加压滴管炉、高压对冲火焰等燃烧实验平台，以及高压固定床/流化床反应器、输运床气化等气化实验平台，激光燃烧诊断系统(激光诱导白炽光 LII、平面激光诱导荧光 PLIF)、Stoke 数积灰取样枪、高温气溶胶取样枪、颗粒在线分级取样系统等实验手段，以及等离子体发射光谱仪、色谱仪、质谱仪、电子能谱仪、红外光谱仪、拉曼光谱仪等用于表征物质化学组成的先进仪器，扫描电镜、透射电镜、比表面积分析仪等用于表征颗粒物理结构的专用仪器，热重分析仪、努森池-质谱仪、显微拉曼光谱-流动反应体系等研究反应特性的仪器。在工程项目方面，以电力公司和设计单位为依托，中电工程完成了国内首套 IGCC 示范电站设计、首台燃煤电厂 3000t/a CO_2 捕集示范的工程设计，完成了国内最大的燃煤电厂 120000 t/a CO_2 捕集工程设计。

The Chinese team consists of 9 universities, research institutes and companies, i.e. Tsinghua University, Zhejiang University, Shanghai Jiaotong University, Harbin Institute of Technologies, China Academic of Science, Huaneng，CPI, CPECC and Shenhua. The team focused on the fundamental research depends on the national research center, have established a series of experimental tips for combustion and gasification, such as wire-mesh reactor, Hencken burner, down-fired combustor, pressured drop tube furnace, pressured counterflow burner and pressured fixed bed/fluidized bed. And advanced analytic instruments have been developed, such as laser combustion diagnostic system（LII,PLIF），Stokes ash deposition sampling probe, ICP-AS/AES, TEM, TGA etc. At the same time, the team focused on the engineering. CPECC has the design experience of the first IGCC demonstration plant and the first coal-fired power plant CO_2 capture demonstration project in China. CPECC sets up an IGCC technology center, which is committed to the research on clean coal utilization, low-carbon technology. CPECC has rich experience to contribute to this project.

7. 合作战略和方法

Coordinate Strategy

本课题将以应用基础研究和技术研发、工程示范相结合的方式进行，中美双方将通过人员互访、数据共享、相互参与以及共同研究等方式开展合作。

The task 1 integrates fundamental research, technologies research and development and engineering demonstration are integrated. During the project implementation, researchers exchange, data sharing, and research participant will be executed by Chinese team and US.

8. 预计成果

Deliverable/ Output

（1） 整体煤气化联合循环发电：

Integrated coal gasification combined cycle：

- ◆ 完整的带有显热回收的 IGCC 系统计算模型；具有工程实用性和通用性的 IGCC 电站整体系统设计方法和设计技术。

  Complete IGCC system calculation model with sensible heat recycling. An universal IGCC power plant design method and technology.
- ◆ 软件著作权一项

  A software copyright of IGCC system design.
- ◆ 形成 IGCC 集成优化及模块化设计技术

（2） 高参数超超临界发电技术：

Advanced Ultra Supercritical power generation：

- ◆ 大容量高参数锅炉热力计算方法及通用大容量锅炉热力计算程序

  The thermal calculation method of large capacity and high parameters boiler, and a general large capacity boiler thermal calculation program modular；
- ◆ 超 700℃超超临界锅炉炉内燃烧与传热计算方法；

  Calculation method on furnace combustion and heat transfer for super 700℃ USC boiler；
- ◆ 超超临界锅炉炉内与锅内传热耦合特性；

  Heat transfer coupling characteristics between the furnace and the pipe of USC boiler；

- ◆ 超超临界锅炉积灰预测模型；
  The prediction model of ash fouling and slagging in USC boiler；

（3） 现役电站提高效率和减排技术：
Efficiency improvement and reduction of carbon of power plant in service：

- ◆ 获得不同炉型、容量以及煤种的现役燃煤发电厂的提高效率及减少 CO_2 排放的潜力；
  Obtained the detailed data of increasing efficiency and carbon reduction for different boiler types, load and coal types in-service power plants；
- ◆ 获得现役电厂的改造技术路线图；
  Obtain the technological roadmap for increasing efficiency and pollutant emission reduction；
- ◆ 获得关键技术的工程示范经验。
  Obtained the retrofitting and operation experience of key technologies.

任务 2：煤炭清洁转化技术

Task 2: Clean Coal Conversion Technology

任务摘要

Summary (200~300 words)

煤炭清洁转化是实现煤炭清洁高效、高价值利用的主要发展方向之一。中美双方研究团队将在计划期间内重点开展煤炭热解气化燃烧分级转化、新型煤炭气化（煤炭化学链气化、煤炭直接制天然气、煤炭催化气化、煤炭液化残渣气化、超临界水解气化）、煤炭生物质共转化及水煤浆燃料等方面的研究与开发，实现煤炭高效低成本转化、碳捕集以及低污染物排放，同时在中美两国进行技术的工业示范，促进所研发的技术在两国的发展与推广。

Clean coal conversion will be one of the main coal utilization technologies. The US and China partners will focus on the research and development of new co-generation system with combined pyrolysis, gasification, and combustion, advanced coal gasification processes (Chemical Looping gasification with CO_2 capture, Direct SNG production from coal, Coal to SNG by Catalytic gasification, Gasification properties of the Coal liquefaction residue, Supercritical water catalytic gasification for low grade fuel (coal and waste, et al)，coal/biomass co-conversion process, and coal water slurry and its utilization. This project will pursue high conversion efficiency with low cost, footprint reductions, low carbon emission, and pollution control at large coal conversion plants. Part of developed technologies will be demonstrated successfully at industrial scale for development and sale in both countries.

1. 任务背景

Introduction

随着石油、天然气资源日趋短缺，对于煤炭资源相对丰富同时又是煤炭消耗大国的中美两国，实现以煤炭为资源的清洁高效转化，不仅可以大幅度提高煤炭转化效率和价值，同时可以有效缓解石油天然气短缺问题。研究开发先进的煤炭转化技术，获得以煤炭为资源的低成本的化工产品、液体燃料是中美两国的共同需求。本任务拟组合中美两国的研究力量，开展煤的热解-气化-燃烧分级转化多联产系统、新型煤化工多联产、先进煤炭气化技术等方面有望可以实现煤炭的清洁高效转化利用技术的研究和开发，实现煤炭高效低成本转化、碳捕集以及低污染物排放。

Coal may be used as resource by Clean Coal Conversion technologies, and may improve 3-E (Efficiency, Economic, Environment) of coal utilization in large scale. Because coal is the main energy resource for China and USA, both countries need the advanced coal conversion technologies for chemical products and liquid fuel to relieve the shortage of oil and natural gas, especially in China. This task will organize the research partners from USA and China to development of advance coal conversion technologies to realize high conversion efficiency with low cost, low carbon emission and high profit. These advance technologies will include new coal co-generation systems with low CO_2 emission, new coal gasification processes, coal/biomass co-conversion process, and coal water slurry and its utilization.

2. 任务目标

Objectives

依托中美两国研究团队的现有研究基础，重点开展煤炭热解气化燃烧分级转化、新型煤炭气化（煤炭化学链气化、煤炭直接制天然气、煤炭催化气化、煤炭液化残渣气化、超临界水解气化）、煤炭生物质共转化及水煤浆燃料等方面的研究与开发，在对关键过程的实验与理论研究基础上，部分技术实现在中美两国的工业示范，并促进所研发的技术在两国的发展与推广。

Based on the research basis of the China team and USA team, the partners will complete the research and development of the new co-generation system with combined pyrolysis, gasification, and combustion, advanced coal gasification processes (Chemical Looping gasification with CO_2 capture, Direct SNG production from coal, Coal to SNG by Catalytic gasification, Gasification properties of the Coal liquefaction residue, Supercritical water catalytic gasification for low grade fuel (coal and waste, et al)，coal/biomass co-conversion process, and coal water slurry and its utilization. Part of developed technologies will be demonstrated successfully at industrial scale for development and sale in both countries.

3. 任务研究内容

Statement of Work (SOW)

依据中美双方在煤转化方向的研究团队的充分讨论，拟在煤炭分级转化多联产技术、新型煤炭转化技术、煤/生物质共转化技术以及水煤浆燃料等方向开展如下 9 个方面的研究工作：

Based on the discussion between China team and USA team, the R&D works will focus the followed 9 sub-tasks due to new co-generation system with combined pyrolysis, gasification, and combustion, advanced coal gasification processes coal/biomass co-conversion process, and coal water slurry and its utilization.

（1） 煤炭热解气化分级转化多联产技术

Co-generation system combined pyrolysis, gasification, and combustion

开发煤热解气化燃烧多联产技术，通过热解气化将煤中富氢成分提取出来用作优质燃料（煤气和可进一步加工生产燃料油的焦油）或高附加值化工原料；所产生的半焦通过燃烧或气化进一步利用，灰渣用于建材生产，从而可实现煤的分级转化和分级利用，大幅度提高煤的利用价值。

The new co-generation system combines coal pyrolysis, gasification and combustion process to realize gas, tar, steam and electricity multi-generation. The coal is first pyrolysised and gasified to produce tar and gas which can be converted into high value chemical product and liquid fuel. The semi-coke can be sent to burn in combustor to produce steam and electricity, ash is for construction material. The main proposed research content is as follows：

◆ 煤的组成特性对煤分级转化和定向转化的影响规律

Coal pyrolysis property and product control.

煤是多种复杂结构的有机物及无机物的混合体，煤的结构不同，其潜在价值和热转化特性不同，单一燃烧或气化方法不能实现煤价值的梯级利用。但如何根据煤的特性实现分级转化梯级利用，必须解决中国煤的组成特性对煤分级转化和定向转化的影响规律。研究典型煤在流化床中的热解特性，床温、气氛、加热速度等对裂解产物的影响，热解产物煤气和焦油品质的调控规律。

The research focus on effect of coal property, temperature, atmosphere, and pressure on coal

pyrolysis product including yield and composition of gas, tar and char by GC and lab scale test rig. On basis of this, a simulation model will be erected and control method is proposed.

- 半焦高效燃烧、气化和污染物协同控制；

  Char combustion and pollutant emission control.

分级转化系统中各种污染物包括 S、N 分级析出，部分转入煤气、部分转入焦油、部分转入半焦燃烧，了解各种污染物的转化历程，进行污染物协同控制也是需要解决的关键问题。此外，热解后半焦着火和燃烧特性也是需要解决关键问题。研究内容包括 S、N 转化历程，半焦在流化床中高效燃烧和污染物控制等。

Char combustion and pollutant emission control. Research focus on char ignition and combustion property, SOx and NOx emission control.

- 热解焦油特性及其利用研究

  Tar treatment and upgrading

研究不同煤种、不同热解条件下产生的焦油特性，依据焦油产品特性的焦油利用方案的研究，研究焦油加氢工艺条件（如温度、压力、氢油体积比、催化剂等）对焦油精制产物产率及组成（包括汽油、柴油）的影响。

The research focus on tar composition and property analysis. Optimize the utilization of tar based on its properties. The effect of the process conditions of tar hydrogenation on the yields and compositions of tar refining products

- 煤的热解燃烧分级转化技术的效率、经济及环境影响的分析及评价

基于煤炭热解燃烧分级转化工业示范装置的运行情况，开展能量与质量平衡计算，进行系统效率、经济与环境影响的分析与评价，并与其他煤炭利用技术进行比较分析。

Efficiency, economic, environmental analysis on co-generation system based the mass and energy balance calculation referring to the operation results of the demonstration plant.

（2） 具备 CO_2 富集能力的煤炭化学链气化技术

Chemical Looping Gasification with CO_2 Capture

所构建的煤炭化学链气化技术以 CaO 固体颗粒为 CO_2 吸收剂在气化炉中获得富氢气体的同时在燃烧炉中富集 CO_2，从而实现煤炭的高效转化。主要的研究内容：

The proposed chemical looping gasification process using CaO as CO_2 acceptor may obtained high hydrogen content gas from the gasifer while the CO_2 rich gas will be produced with using a little pure oxygen in the combustor. The main proposed research works are as followed:

- 以 CaO 为 CO_2 吸收剂的化学链气化过程的实验和理论研究

研究无氧富氢气氛下 CaO 吸收 CO_2 的碳酸化反应和煤炭水蒸气气化制氢化学反应机理及其耦合特性，并确定反应条件参数（压力、温度、气氛、灰成分组成等）的影响特性；高 CO_2 浓度下碳酸化固体产物($CaCO_3$)的煅烧分解再生反应及半焦燃料的燃烧反应机理及其耦合特性，确定反应条件参数（压力、温度、气氛、灰成分组成等）的影响特性；基于 CaO 吸收的多反应器（流化床）体系中多相流动以及物质与能量的传递、循环和平衡特性。

Based on a series of experiments will be completed on the pressured TGA system and the constructed bench scale fluidized bed reactors, the mechanism of reactions in the proposed chemical looping gasification process will be studied and the effect of the operating parameters (temperature, pressure, reaction atmosphere, ash composition) will be analyzed.

- 化学链气化过程中 CaO 碳酸化和 $CaCO_3$ 煅烧分解过程的反应活性及其活性维持

研究 CaO 颗粒物理化学特性及各影响因素（压力、温度、气氛、灰成分组成等）对碳酸化反应过程的反应活性的影响特性；石灰石和碳酸化后 $CaCO_3$ 在富 CO_2 条件下的煅烧分解再生反应过程和各影响因素（压力、温度、气氛及灰成分等）及其对吸收剂反应活性的影响特性；CaO 吸收剂制备方法如预煅烧、改性处理及水/水蒸气活化等对其反应活性的影响特性；获得活性维持方法并研究出满足系统经济运行的 CO_2 固体吸收载体；

Research on the characteristics of the reactivates of the CaO-based sorbent during cyclic calcination-carbonation reactions in the chemical looping gasification process and the novel CaO-based sorbent will be developed to meet the requirements of economic operation.

- 基于循环流化床反应器的化学链气化试验研究和模型研究

在所建的由压力循环流化床气化炉和压力循环流化床再生炉组成的化学链气化试验装置上开展实验研究。在实验和理论研究基础上，有机地把气化炉和燃烧炉内反应动力学特性和流体动力特性相结合，建立煤炭化学链气化过程的数学模型，实现系统运行参数的优化，并具备下一步开展中试研究的能力。

A series of experiments will be completed on the constructed chemical looping gasification facility. Based on the experimental results, modeling and simulation works on the proposed chemical looping gasification process will be completed to optimize the process and guide the design and operation. It will be ready for designing and operating the pilot plant in next step.

- 开展煤炭化学链气化过程的效率、经济及环境分析与评价，并与其他煤炭转化技术进行对比。

  Efficiency, Economic, Environmental analysis on the proposed chemical looping gasification based on the research results.

（3） 煤直接制代用天然气技术研究

Direct SNG production from coal

通过向气化炉中引入一定量固体二氧化碳吸收剂，同时调整反应条件，使得在反应器内集成气化、变换、二氧化碳吸收、加氢气化等反应，获得高甲烷浓度的气体。吸收剂再生所需的热量由焦炭燃烧提供，同时产生高纯二氧化碳。

With using CO_2 absorber in the gasifier, high CH_4 content gas may be obtained by optimizing the operating parameters. The main research works are as followed:

- 温度、压力、停留时间、升温速率等反应条件对产物组成的影响，优化煤直接制 SNG 的反应条件

  The effects of temperature, pressure, residence time and heating rate on product compositions; the optimization of reaction conditions for direct SNG production
- 固体二氧化碳吸收剂化学组成、物理结构等对其循环性能的影响，优化固体吸收剂的化学组成与物理结构

  The effects of the chemical composition and physical structure of CO_2 solid absorbent on its cyclic performance; the optimization of the chemical composition and physical structure of solid absorbent
- 煤直接制 SNG 过程中热解、气化、固体吸收剂吸收二氧化碳等反应的反应动力学

  Reaction kinetics of pyrolysis, gasification, CO_2 absorption
- 反应器结构对煤制 SNG 产物组成的影响，优化反应器结构，并建立反应器性能预测模型

The effects of reactor type and structure on product compositions; the optimization of reaction type and structure; the development of prediction model for reactor performance

- 煤直接制 SNG 系统的技术经济性分析
  Techno-economic analysis of direct coal-to-SNG system

（4） 煤的催化气化天然气转化技术

煤的催化气化天然气转化技术是将煤的催化热解、催化气化和燃烧有机集成的流化床分级转化过程，是基于传统流化床气化、煤催化气化和煤加氢热解的技术革新。

High CH_4 content gas may be obtained from a novel fluidized bed reactor with combining catalytic pyrolysis, catalytic gasification and combustion processes. The main research works are as followed:

- 催化剂的研究
  Research and development on the catalyst
  - 研究催化剂与煤界面的相互物理及化学作用，煤表面性质和结构对催化剂的化学物理形态的影响；
    The physical and chemical effects on the interface between catalyst and coal, and influence of coal surface properties and structure on the catalyst physical and chemical morphology;
  - 研究煤低温氧化或热浸渍等预处理前后煤表面官能团变化对催化剂担载及分散形态的影响；
    The influence of surface functional groups change after low-temperature oxidation or thermal dipping pretreatment of coal on catalyst loading and dispersion morphology.
  - 研究多组分催化剂协同作用机理；
    Synergistic effects of multi-component catalyst;
  - 进行煤催化气化本征动力学的研究；
    Intrinsic kinetics of catalytic coal gasification;
  - 研究催化剂失活和损失的机理以及相应的回收技术；
    The catalyst deactivation and loss mechanism and recovery techniques;
  - 生物质等废弃物作为催化剂与煤共气化的工艺条件优化；
    Optimization of technological Parameters for co-gasification of coal with waste biomass as a catalyst
- 气化炉方面的研究
  Research and development on the catalytic gasifier
  - 进行高压煤粉进料系统的研究；
    High-pressure coal feeding system
  - 进行碱金属对气化炉材质和耐火材料的腐蚀机理研究；
    The corrosion mechanism of the alkali metals on the material and refractories of gasifier;
  - 研究气化炉内灰与催化剂熔融机理和结渣对气化炉排灰过程的稳定性与连续性的影响；
    The influence of melting mechanism of ash with catalyst and slagging on the stability and continuity of ash discharge process in the gasifier;
  - 进行气化炉内温度梯度分布的测量与监控；
    The measurement and monitoring of the temperature gradient in the gasifier;
- 气化炉设计及放大

Gasifier design and scale-up

- 通过模拟分析气化炉内气固流场、温度场、浓度场，优化气化炉内构件与分布板结构，从而提高碳转化率与甲烷产率；
  Improve the carbon conversion rate and methane yield by optimizating members and distributor structure, with simulation analysis of solid flow field, temperature field and concentration field in gasifier.
- 通过对不同尺寸气化炉内工况的模拟，归纳出放大过程中的关键参数，进而总结催化气化炉放大规律。
  Summarize the key parameters in the scale-up process and then get laws of CCG gasifier scale-up by the simulation of conditions in different scale gasifier.

（5） 煤直接液化残渣气化特性研究

Gasification properties of the Coal directly liquefaction residue

将煤炭直接液化所产生的残渣进行气化制氢，通过调节煤液化以及残渣气化反应的条件，实现工艺流程的整体优化。

Evaluating the gasification properties of coal DTL residue, such as slurryability, reaction kinetics, ash fusibility, and modeling the residue gasification process.

- ◆ 开展煤液化残渣、液化残渣和不同煤种不同配比的混合样的气化过程反应动力学等基础研究；
  Study on gasification properties, such as reaction kinetics, of liquefaction residue, coal liquefaction residue and coal blending sample;
- ◆ 液化残渣成浆性研究
  Study on the slurryability of liquefaction residues;
- ◆ 液化残渣本身及其与煤混合样的成浆特性研究
  Study on the slurryability of liquefaction residue, residue and coal mixture;
- ◆ 残渣气化过程模拟计算
  The residue gasification process Modeling.

（6） 超临界水中低阶煤和含碳废弃物催化气化的基础研究

Supercritical water catalytic gasification for low grade fuel (coal and waste, et al)

揭示跨临界过程中超临界水性质、催化剂以及反应物料结构变化及其相互作用机制，筛选出低阶煤适用的廉价高效的催化剂体系。

The main tasks are trying to reveal the property of supercritical water, the varieties and interactions of catalysts and raw materials, and low cost and efficient catalyst peat and swine manure.

- ◆ 超临界水对催化剂分散的影响
  Catalysts dispersion in supercritical water

重点研究跨临界过程对催化剂分散效果、催化效果，对反应参数的调控提供理论依据；

The main goal is catalysts particle size distribution of water soluble catalyst in supercritical water and the effect of parameter on the particle size distribution in trans-critical supercritical water;

- ◆ 超临界水中催化剂与低阶煤及固体废弃物的相互作用原理
  Interaction mechanism between catalysts and peat and seine manure in supercritical water

研究超临界水低阶煤和固体含碳废弃物热解的影响，以及对热解生成焦状物质的多孔性能和催化剂分散的作用；

The work will focus on the effect of supercritical water on conversion of l peat and swine manure and the catalysts dispersion behavior on the surface of char, which is produced by pyrolysis of peat and swine manure;

◆ 超临界水管式反应器内传递及流动模拟

CFD simulation in Supercritical water reacto

研究管式反应器内多相体系流动规律，揭示反应器内传质、传热、多相流动、化学反应之间的相互影响与联系。

The work will focus on CFD simulation of peat and swine manure conversion process in supercritical tubular reactor.

（7） 非常规气化过程测量、模拟及环保技术研究

Measurement \ Modeling \ Environmental Technologies for Unconventional Coal Gasification

研究非常规气化过程测量技术、数值模拟技术、环境评估与治理技术。从新型气化过程机理出发，结合工业化现场试验，开发先进的测量技术、数值模拟技术和环境评估与治理技术，实现对煤炭地下气化炉全生命周期状态的测量反演、模拟分析、环境评估与治理。

◆ 非常规气化过程测量技术研究

Research on the measurement technology for Unconventional Coal Gasification

以煤炭非常规气化井下测温法为基础，辅以其他物探方法，对煤炭地下炉全生命周期状态进行探测，并对气化区进行重构和可视化技术研究，形成地下反应工作面综合探测技术。

Based on the thermometry of under well in Unconventional Coal Gasification, with other geophysical methods, we would probe the underground gasifier. At the same time, we can reconstruct the cavity and then form the integrated measurement technology for Unconventional Coal Gasification

◆ 非常规气化过程模拟技术研究

Research on modeling technology for Unconventional Coal Gasification

通过实验室试验研究获得煤层反应基本参数，依托美方建立煤炭地下气化过程数学模型。通过中方的现场试验数据进行校正求解，模拟非常规气化过程，结合有限的探测手段揭示气化炉的状态，实现非常规气化过程全流程模拟。

Based on the basic reactions parameters of coal seam by laboratory tests, LLNL would establish mathematical models of Unconventional Coal Gasification. The modeling results must be corrected with the field test data. The Unconventional Coal Gasification process would be simulated combining with the measured results.

◆ 非常规气化过程环保技术研究

Environmental Protection technology study for Unconventional Coal Gasification

进行煤炭非常规气化污染物析出及水污染特征研究和煤炭非常规气化地层沉陷监控与研究，考察煤炭非常规气化有机/无机特征污染物的析出规律、非常规气化燃空区残留物浸出毒性、煤炭非常规气化全生命周期地表沉陷规律，获得煤炭非常规气化过程对地下和地表环境的潜在污染行为规律和煤炭非常规气化全生命周期地表沉陷规律及防控措施。

Based on the study of the characteristics of pollutants and monitor surface subsidence, we will obtain the ground and underground environmental potential pollution and surface subsidence rule and control measures during underground coal gasification through the emission of organic/inorganic specific pollutants, the toxicity of remains in cavity and the law of surface

subsidence during Unconventional Coal Gasification

（8） 煤炭与生物质的共转化技术研究

Coal/biomass co-conversion process

开展煤与生物质共转化的资源化利用基础研究，通过煤与生物质共热解、气化和燃烧，实现煤与生物质的清洁转化，生产清洁合成气和高附加值化学品等。

Fundamental research on co-processing of biomass and coal will be taken through co-pyrolysis, co-gasification and co-liquefaction. A clean co-conversion from coal and biomass to syngas and high-value chemicals will be carried out.

- 针对煤与生物质物理与化学特性的差异，研究生物质预处理与改性方法，改善生物质表观和物理化学特性，实现煤与生物质同步协调共转化；

  Based on the property difference between coal and biomass, pretreatment and modification of biomass will be researched to optimize the nature of biomass and achieve harmonious co-conversion of biomass and coal.

- 研究几类主要生物质与煤热解规律的协同效应，探索生物质中无机成分对煤热解和气化过程的催化效应，为设计新型煤与生物质共气化的方法和装置提供理论指导和设计基础。

  To understand the catalysis effects of inorganic substances in crop straw on pyrolysis and gasification of coal, synergy effects of crop straw with coal will be studied. The research results will guide the design of new co-gasification methods and equipments.

- 煤与生物质共热解过程的定向转化和精细分离，探索低碳化高附加值利用途径。

  To realize the directional co-conversion and fine separation, and explore a path for the low-carbon and high valuable use.

- 建立煤与生物质共气化的试验评价体系，研究共气化过程的工艺条件、催化剂、气化效率、转化率、煤气组成及调控、以及灰渣特性。

  Constructing the test system for evaluation of co-conversion of biomass and coal to research the co-gasification conditions, catalysts, gasification efficiency, conversion rate, gas components and characteristics of ash.

- 煤及生物质共热解产物的燃烧与气化特性

  Gasification and combustion of the co-pyrolysis char.

（9） 水煤浆燃料及其利用技术的研究

Coal water slurry (CWS) and its utilization

中美方合作开展水煤浆燃料及其燃烧气化特性的研究，并形成高容积热负荷燃油锅炉改烧水煤浆成套技术和工艺。

The research works will focus on the properties of coal water slurry and the combustion and gasification process.

- 水煤浆燃料制备及流变特性的实验与理论研究，并研究开发低流阻水煤浆在线过滤器,以适应各种型号锅炉管道低流动阻力要求

  Experiments on the properties of CWS, R&D of Online CWS filters with low flow resistance

- ◆ 水煤浆燃料燃烧与气化特性的实验与理论研究
  Experiments and theory analysis on Gasification and combustion of CWS
- ◆ 开发适合水煤浆特点的长寿命低压雾化喷嘴，并形成系列化，平均雾化粒度为 50～60μm，负荷调节比为 40～100%。
  Developing series longevous atomizing nozzles with low pressure suited for CWS，which can realize the average atomized granularity between 50～60μm and load regulation rate between 40～100%.
- ◆ 油/水煤浆燃烧器开发和洁净燃烧技术研究
  R&D of CWS combustion technology and demonstration on large scale boiler

4. 任务组织

Project Organization

中美合作者将根据现有的研发基础条件和研发需求，联合组织技术队伍，在关键领域开展合作研究。中方的浙江大学、美方的西弗吉尼亚大学将分别牵头各自的团队，依据分工，以各子任务为单元进行全面合作。

Based on the research basis and requirements of the China team and USA team, the partners will focus on the research and development of nine key coal conversion technologies. Zhejiang University from China and West Virginia University from USA will be as the team leaders to organize the partners to collaborate deeply with each other by sub-tasks.

	works	Chinese Team					USA team					
		ZJU	SHENHUA	ENN	CAS	CUMT	WVU	UWY	NTEL	LLNL	UK	
1	Co-generation system combined pyrolysis, gasification, and combustion	⊗			×		⊗	×	×			LP AMINA
2	Chemical Looping gasification with CO_2 capture	⊗					×				×	LP AMINA
3	Direct SNG production from coal				⊗		×	×	×			
4	Coal to SNG by Catalytic gasification			⊗			×	×	×			
5	Gasification properties of the Coal DTL residue		⊗				×		×			
6	Supercritical water catalytic gasification for low grade fuel (coal and waste)			⊗			×		×			DUKE
7	Measurement \ Modeling \ Environmental Technologies for Unconventional Coal Gasification			⊗						×		
8	Coal/biomass co-conversion processes	×		×		⊗	⊗	×	×			LP AMINA
9	coal water slurry and its utilization	⊗					×		×			

Note：⊗ Initiator of the Sub- task

× Participants of the sub-task

5. 任务组织任务研究计划（包括年度计划）

Project Schedule

	Sub-tasks	Year 2011				Year 2012				Year 2013				Year 2014			
		Q_1	Q_2	Q_3	Q_4	Q_1	Q_2	Q_3	Q_4	Q_1	Q_2	Q_3	Q_4	Q_1	Q_2	Q_3	Q_4
1	Co-generation system combined pyrolysis, gasification, and combustion	----------															
2	Chemical Looping gasification with CO_2 capture	----------															
3	Direct SNG production from coal	----------															
4	Coal to SNG by Catalytic gasification	----------															
5	Gasification properties of the Coal DTL residue	----------															
6	Supercritical water catalytic gasification for low grade fuel (coal and waste)	----------															
7	Measurement \ Modeling \ Environmental Technologies for Unconventional Coal Gasification	----------															
8	Coal/biomass co-conversion processes	----------															
9	coal water slurry and its utilization	----------															

Note：Fundamental experiments ----------; Pilot plant ----------

Modeling and analysis ----------; Final Report ----------

6. 合作基础与合作能力

Personnel, Facility and Equipment

中美双方参加单位在所承担的研究任务的领域中都已开展了相应的研究工作，已形成一支具有很强研究开发能力的研究队伍，拥有一批先进的仪器设备，并建有相关的研究台架，同时具有丰富的国际合作经验。

Both China and USA partners have had enough research works for the proposed tasks. These partners have formed a strong research teams with many advanced instruments, facilities. Meanwhile, all partners have extend international collaboration experiences. Part of these partners have collaborated deeply with each other on many projects in past and look forward to working together even more closely in this task.

主要设备：

Main facilities：

浙江大学：1MW 循环流化床热电气多联产试验装置，流化床热解反应器器，焦油加氢实验装置，加压双流化床实验系统，循环流化床燃烧/气化实验台，流化床快速热裂解实验装置，催化合成实验装置，4MW 水煤浆燃烧试验装置；中科院：高压固定床/流化床反应器，5 吨/日级输运床加压热态装置，大型冷模试验装置，加压热重仪；新奥集团：无井式煤炭地下气化工业化试验基地，1t/d 催化气化工艺实验装置，24 kg/d 的实验室规模的超临界催化气化综合试验系统；中国矿业大学：热重-红外联用仪，气-质联用仪，液-质联用仪，高效液相色谱仪

Zhejiang University：1MW co-generation pilot plant, fluidized bed pyrolysis reactor, Tar hydrogenation reactor，Twin pressure fluidized bed reactors, Circulating fluidized bed combustor and gasifier, fluidized bed flash pyrolysis reactor, Catalytic synthesis test system, 4MW coal water slurry combustor

Research Center for Clean Energy and Power, Chinese Academy of Sciences (CAS)：PTGA, GC, GC-MS, high pressure fixed-bed and fluidized-bed reactors, 5 TPD test facilities of fuel flexible gasification, large scale cold test facilities

ENN：1t/d catalytic gasification facility，24 kg/d Supercritical water catalytic gasification system；

China University of mine technology (CUMT): TG-FTIR, GC-MS, LC-MS, SEM, and TEM

国际合作:

浙江大学先后同美国等十几个国家和地区的科研机构、大学和公司建立了良好的合作关系，取得了显著的成果。目前已成立了浙江大学普林斯顿大学清洁能源中心，浙江大学伊利诺伊大学生物质能中心，浙江大学瑞典皇家工学院清洁能源联合研究中心、浙江大学-曼切斯特大学清洁能源中心等，同时与普渡大学、哥伦比亚大学和西肯塔基大学等签有长期合作协议。浙江大学将与美方合作伙伴开展卓有成效的合作研究。

神华集团已与本项目合作方西弗吉尼亚大学、NETL 在中美化石能合作协议附件 II 中已有合作经历，为本项目的合作奠定基础。

新奥集团已建立了广泛的横向国际合作，加入了欧盟 UCG 技术协会，与澳大利亚、南非、英国、印度、哈萨克斯坦、美国等进行了广泛的技术交流，积累了非常丰富的对外技术交流经验，形成了完备的对外技术交流机制。另外还与美国 LLNL、NETL 国家试验室等一大批国内外的科研单位建立了良好的合作机制，被授予“国际科技合作基地”，成为国家首批“国际科技合作基地”之一。

中国矿业大学与美国肯塔基大学和西弗吉尼亚大学已有相关合作项目正在执行，为本项目的执行打下良好的基础。

7. 预计成果

Deliverable/ Output

通过中美双方参与单位在各子任务中的研究开发工作，按要求提交项目研究进展报告和成果报告，形成具有知识产权的新技术,发表相应论文，并预计在所开展的煤炭转化技术的研究与开发工作上将取得实质性进展：

The proposed research and development works will be completed by the joint team with submitting the progress report and final report. The breakthroughs on the coal conversion process will be obtained and several innovation coal conversion technologies will be formed:

（1） 完成煤炭热解气化分级转化技术的研究与开发，实现煤炭的热解气化分级转化技术的工业示范运行；

Developed the co-generation system combined pyrolysis, gasification, and combustion and ready for commercial stage；

（2） 完成化学链气化、煤炭催化气化、煤炭气化直接制天然气、超临界催化气化等新型气化技术的基础研究，并具备在下一步开展中试研究或工业示范的能力；

Developed several new gasification technologies including chemical looping gasification, Direct SNG production from coal, Coal to SNG by Catalytic gasification, Supercritical water catalytic gasification for low grade fuel, and ready for construction of the pilot plant or demonstration plant；

（3） 完成煤碳直接液化残渣气化特性评价，包括成浆性、气化反应性、灰渣特性等，提出液化残渣气化利用方案，并开发出适宜的残渣成浆添加剂，成浆浓度>61%；
Finishing the gasification properties evaluation of coal DTL residue, include slurryability, reactivity and ash fusibility, and developing new additives, the concentration of slurry >61%；

（4） 形成煤及生物质共转化新技术，在共热解、气化及液化方面具备在下一步开展中试或工业示范的能力；
Developed new coal/biomass co-conversion technologies, and co-pyrolysis, co-firing system, and ready for construction of the pilot plant or demonstration plant；

（5） 形成包括低阻水煤浆在线过滤、先进水煤浆雾化喷嘴以及燃烧气化等在内的水煤浆燃料成套利用技术和工艺，并实现水煤浆代油燃烧的工业示范运行。
Developed the utilization technologies of coal water slurry including online CWS filters with low flow resistance, new CWS atomizing nozzles and gasification and combustion of CWS, and realize the long-term continuous operation on the large scale boiler;

（6） 形成先进煤转化技术的技术、经济及环境的评价体系
Developed the advanced efficiency, economic and environmental analysis methods for the advance coal conversion technologies.

任务 3-5：碳捕集技术联合工作方案

Tasks 3-5: Joint Working Plan of Carbon Capture Technology Development

（美方：任务 5--新型捕集技术发展；
中方：3--燃烧前 CO_2 捕集，任务 4--燃烧后 CO_2 捕集，任务 5--富氧燃烧）

(US-ACTC: Task 5 - Novel Capture Technology Development; China-ACTC: Task 3 - Pre-Combustion CO2 Capture, Task 4 - Post-Combustion CO2 Capture, and Task 5 - Oxyfuel Combustion)

1. 研究目标

Research Objective

通过联合研究计划，中美清洁煤技术联盟希望实现以下目标：

Through streamline bilateral joint cooperation, both US and China ACTCs are targeting:

（1） 开发 IGCC 系统设计与优化技术；
Development of techniques to aid in design and optimization of commercial-scale IGCC system.

（2） 开发燃烧前 CO_2 捕集关键技术；
Development of key technologies for pre-combustion CO2 capture.

（3） 开发对燃烧前/后 CO_2 捕集均适用的、热集成、稳定性高、烟气适用性广的 CO_2 脱除技术；
Development and fabrication of heat-integrated, robust, ultrathin barriers with reasonable contamination resistance to flue gas for both pre- and post-combustion CO2 removal.

（4） 为燃烧前及燃烧后 CO_2 捕集制备吸收能力强、反应速度快、稳定性高的添加活化剂的新型 CO_2 吸收剂；
Formulating new CO2 absorbents with chemical additives for pre- and post-combustion CO2 capture with high capacity, fast kinetics and high stability.

（5） 研究中美两国典型煤种富氧燃烧及污染物生成特性；
Developing a carbon enrichment technology to minimize stripper size and energy consumption for the post-combustion CO2 capture process.

（6） 开发碳富集技术以降低燃烧后 CO_2 捕集过程设备尺寸和能量消耗；
Studying the fundamental and pilot-scale combustion and emission characteristics of indigenous Chinese and U.S. coals of different ranks under oxyfuel conditions.

（7） 建立富氧燃烧器设计，富氧燃烧中试评价与优化模型；
Creating a model for oxy-fired burner design, pilot-scale oxy-combustion evaluation and optimization.

（8） 对比中美两国烟气条件，电站运行和环境需求；
Comparison of coal-derived flue gas conditions, power plant operation and environmental requirements between the US and China.

（9） 建立商业应用系统优化和评价、技术经济分析和比较的准则；

Establishing guidelines/protocols/criteria for system optimization and evaluation, techno-economic analysis and comparison at commercial-scale application.

（10） 开展 100 万吨每年 CO_2 捕集系统技术经济可行性研究，获得燃烧后 CO_2 捕集系统优化和工业设计能力；

Conducting the technical and economic feasibility study of 1 million tons / year CO2 capture system, and obtaining the capabilities of optimization and engineering design for post-combustion CO2 capture system.

（11） 开展富氧燃烧电站工程可行性研究。

Conducting a commercial-scale engineering feasibility study for an oxyfuel -combustion reference plant.

2. 背景和技术路线

Background and Technical Approach

总体来讲，有两种方法可以实现化石燃料电厂的二氧化碳减排：（1）通过技术改造/优化或采用先进的发电技术来提高电厂整体效率；或者（2）通过燃烧前/燃烧后碳捕集，以及富氧燃烧过程来进行碳捕集。超超临界粉煤燃烧发电和整体煤气化联合循环发电（IGCC）是提高电厂效率两个最有前景的发电技术。但是，IGCC 发展和使用还处在早期阶段，所以研究发展 IGCC+CCS 技术对中美两国都有非常重要的意义。

In general, there are two ways to mitigate CO2 emissions from carbon-based fossil fuel energy conversion plants: (1) increase overall plant efficiency through modification/ optimization or deployment of advanced power generation technologies; or (2) capture the carbon released by either pre-, post-, or oxy-fired combustion CO2 enrichment processes. To achieve high plant efficiency, ultra-supercritical pulverized coal combustion and integrated gasification combined cycle (IGCC) technology have been considered as two of the most promising power generation technologies. However, the development and implementation of IGCC into power generation is still in the early stages. So, research and development of IGCC + CCS technologies have significant strategic impact on both the Chinese and U.S. economies.

为了捕集在发电过程中产生的 CO_2，人们研究比较了许多不同的技术和过程。但是目前所有的技术费用成本都较高，主要来自于能源消耗的操作费用和昂贵的设备费用。然而，理论的碳捕集成本却比目前可用的商业化过程的要低很多（10-20 倍）。如果先进的碳捕集技术可被商业应用，同时保持较高的碳捕集效率和低的设备和运行成本，那么实施碳捕集的市场时间表将被大大提前。

To capture CO2 during the power generation process, many technologies/processes have been proposed, investigated and compared in all three capture categories. However, all of the current approaches have high capture costs, primarily from operational expenses (energy penalty) and expensive capital equipment. The theoretical efficiency of capture is much higher (10 to 20 times) than what is commercially available today. If advanced capture processes can be commercialized with substantially higher capture efficiencies and lower capital and operating expenses, then the market penetration timeline for CCS may be greatly enhanced.

通过中美清洁煤技术联盟的共同努力，研究者将会克服主要障碍，实现较高的发电效率和对环境较小的影响。第一种方法是开发商业化规模的 IGCC 系统设计与优化技术，着重于系统集成、优化、关键组件和先进 CO_2 分离技术。在这一方法中：（a）中美清洁煤技术联盟研究者们（由中国华能集团牵头，通用电气和杜克能源协助）将以目前中国在建的第一个 IGCC 系统经验和杜克 Edwardsport 电厂的 IGCC 经验为基础，开发 IGCC 优化技术和商用

规模的 IGCC 设计技术；（b）研究者（由中国华能集团牵头，美国 LANL 协助）将研发关键性部件，包括热集成、稳定性高和带有一定抗烟气杂质、适用广的超薄分子膜，先进的气水变换反应器，先进的分离试剂和先进的压缩技术等。

Through the joint effort of US and China CERC-ACTC, researchers will tackle the major hurdles of producing electricity with high efficiency and lower environmental impact. The first approach is to develop techniques for the optimization and design of commercial-scale IGCC systems with emphasis on system integration, optimization, key component development and advanced CO2 separation technology. In this approach, (a) researchers from US-China ACTC (led by Huaneng Group in China, assisted by GE and Duke Energy in US) will develop the techniques for the optimization and design of a commercial-scale IGCC system based on the existing research basis and demonstration experience of the first IGCC plant currently under construction in China and the experience of IGCC at Duke's Edwardsport Station; (b) researchers (led by Huaneng, may assisted by LANL in US) will develop the advanced key components including heat-integrated, robust, ultrathin barriers with reasonable contamination resistance to flue gas, advanced water-gas shift reactor, advanced separation reagents and advanced compression technology.

第二种方法是采用富氧燃烧。中国和美国都有大量的煤炭资源，包括褐煤、烟煤、贫煤和无烟煤等。举例来讲，选择性地把氧气引入到合适的火焰区域，将能够使低挥发分的粉煤在前后墙喷嘴布置的炉膛中燃烧，从而避免了下行喷射设计的复杂性。中美清洁煤技术联盟研究者（由华中科技大学牵头，美国 B&M 和 Alstom 协助）将会收集各种条件下富氧燃烧的基础数据和工业小试规模实验的运行数据，和对商用规模下利用富氧燃烧进行 CO_2 分离的可行性和经济性分析。

The second approach is to expand experience on oxyfuel combustion. Both China and U.S. have large coal reserves including lignite, bituminous, lean and anthracite, etc. Strategic introduction of oxygen into proper flame zones can enable low volatile pulverized coal to burn in a wall-firing configuration and avoid the complexities associated with the down-shot design, as one example. Researchers from US-China ACTC (led by HUST in China, assisted by B&W and Alstom in US) will collect fundamental and pilot-scale data associated with various oxyfuel combustion conditions and conduct feasibility and economic analysis on the commercial-scale deployment using oxyfuel combustion technology for CO2 separation.

第三种方法是通过对中美两国的一百万吨/年燃烧后 CO_2 捕集系统进行热集成、优化、技术经济性分析和对比，平衡固定资本投资（反应动力学）和运行费用（能源耗损）。中美清洁煤技术联盟研究者（由肯塔基大学牵头，华能集团协助）将会开发一种有机金属酶模拟催化剂来降低固定资本投资，和开发一种电容性的去离子过程来增加解析塔前溶液中碳含量，从而减少溶液再生过程中的能量消耗。美国的研究者（由 LANL 带头）将采用新的制造技术来制造一种高渗透的高选择性的膜来分离 CO_2。中国的研究者（由华能集团牵头，美国肯塔基大学协助）将会开发/评估新的捕集试剂，这些试剂有较高的吸收能力，高的抗降解性和抗烟气杂质的优点。同时，还将对中国和美国应用的一百万吨/年燃烧后 CO_2 捕集进行热集成、优化、技术经济性分析。

The third approach is to balance the capital cost (reaction kinetics) and operation cost (energy consumption) in the post-combustion capture process by conducting process heat integration, optimization and techno- economic analysis and comparison for 1 million tons/ year post-combustion CO2 capture for both US and China applications. Researchers in the US-China ACTC US (led by UKy, assisted by Huaneng led-team in China) will develop an organometallic enzyme mimics catalyzed solvent to reduce capital cost and capacitive deionization (CDI) process

to reduce the energy consumption for solvent regeneration by enriching the carbon loading prior the stripper; Researchers in the US (led by LANL) will use novel fabrication technologies to create membranes with high-permeability and high-selectivity for CO2 separation; Researchers in China (led by Huaneng, assisted by UKy in US) will develop/evaluate new capture reagents with high solute capacity and higher resistance to solvent degradation and contamination. They will also conduct process heat integration/optimization and techno- economic analysis for 1 million tons/ year post-combustion CO2 capture for both US and China applications.

除了以上三点，由中美清洁煤技术联盟成员还将：（1）收集和研究对比中美两国烟气条件，电站运行和环境需求的相似点和区别；（2）建立商业应用系统优化和评价、技术经济分析和比较的指导/准则/标准。

Along with the three aforementioned approaches, a joint committee composed of participants from both US- and China ACTC will be formed to (1) collect and study the similarities and differences of coal-derived flue gas conditions, power plant operation and environmental requirements between the US and China; (2) establish guideline/protocol/criteria for system optimization and evaluation, techno-economic analysis and comparison for commercial-scale application.

3. 任务描述（五年计划）

Task Statements (full five year plan)

美方-清洁煤技术联盟：美国清洁煤技术联盟研究将集中在两个主要的方面，5 个阶段，时间跨度 60 个月。第一种途径，选择性膜的设计和系统发展整合，由 5 个部分组成：合作模型发展和执行、膜系统和经济分析；材料&膜合成及优化；材料&膜评估；工业小试和工业中试膜评估；第二种途径：催化溶液和捕集后增加溶液中碳含量（电容性的去离子）混合过程，包括以下九个主要部分：合作模型发展和执行；均相催化剂建模和合成；催化剂评估；开发提升溶液碳含量的方法；新型电极的开发；高质量均相催化剂合成与长期效果评估；电容性的去离子过程制造和长期效果评估；混合过程系统和经济分析和示范装置研究。

US-ACTC: The research as outlined in the US-ACTC proposal will focus on two overarching approaches with efforts spanning five (5) phases over a total of 60 months. The first approach, membrane selective barrier material design, development and system integration, is comprised of 5 main activities: Collaboration Model Development and Execution, Membrane, Systems, and Economic Analysis; Materials & Membrane Synthesis and Optimization; Materials & Membrane Evaluation; and Pre-pilot to Pilot Scale Membrane Evaluation, as further defined below. The second approach, catalyzed solvents and post-scrubbing carbon enrichment (capacitive deionization-CDI) hybrid process, is comprised of nine main activities: Collaboration Model Development and Execution; Homogeneous Modeling and Synthesis; Catalyst Evaluation; Carbon Enrichment Process Development; Electrode Material Development; Larger Quantity Homogeneous Catalyst Synthesis and Long-Term Evaluation; The Fabrication and Long-term Evaluation of CDI Process; Hybrid Process System and Economic Analysis; and Slipstream Investigation.

中方-清洁煤技术联盟：中国清洁煤技术联盟研究内容较广，包括燃烧前 IGCC 过程部件开发，溶剂/吸附剂开发和评估，富氧燃烧，基础煤特征，工业小试的实验数据采集，过程优化和系统分析；燃烧后溶液/固体吸附剂开发；对采用 MEA 溶液的商业化规模应用进行可行性分析和设计等。

China-ACTC: The research proposed by the China ACTC team is a much broader research program which covers pre-combustion (IGCC) process component development, solvent/sorbent development and evaluation; in-situ (oxyfuel) combustion fundamental coal characteristic, pilot-scale experimental data collection, process optimization and system analysis; and post-combustion solvent/solid sorbent development, the feasibility and process design for commercial scale deployment using MEA as a reagent.

中美清洁煤技术联盟：除上述内容外，中美双方还将在以下三个方面展开共同努力。

US-China Joint ACTC: Besides tasks detailed later on, three joint efforts will be made:

(1) 了解中美两国烟气条件，电站运行和环境需求的异同；
Understand similaritie s and differences of coal-derived flue gas conditions, power plant operation and environmental requirements between the US and China.

A 确定进行合作的主要中方和美方工作人员，创建 CO_2 捕集工作组。
Identify key personnel to collaborate with on both the US and China side and create a CO2 Capture Working Group

B 进行电子邮件和电话交流
Initiate email and phone conversations discussing carbon capture

C 合作组织工作年会。
Collaborate to organize yearly topical meetings.

(2) 建立指导方针/标准。对系统优化和评估，膜合成和评估，催化剂选择，中国和美国任务项目成果进行评估。可能的领域包括：
Establish guideline/protocol/criteria for system optimization and evaluation, membrane synthesis and evaluation, catalyst selection, production and evaluation for both US and Chinese projects outlined in this Task. Possible areas include:

A 基础研究包括在给定烟气条件下溶液开发，膜材料和催化剂选择。
Fundamental study including solvent development, membrane material and catalyst selections at given coal-derived flue gas conditions;

B 标准实验条件下，工业小试和工业中试实验评估。
Bench- and Pilot-scale evaluation at standardized experimental conditions

C 标准电耗和花费下（设备、能量相关费用）的商业化规模系统技术经济分析。
Commercial-Scale Techno and Economic analysis at standardized battery and costs associated with equipment and energy consumption.

(3) 在有限的 CERC 资助下，制定对中美双方都有利的研究战略。
Develop research matrix beneficial to both US and China under the limited CERC funding.

子任务 1. IGCC 系统集成与优化

Subtask 1. Development of Techniques for Integration and Optimization of IGCC system.

基于中国正在建设的首套 IGCC 示范经验以及多年 IGCC 的研究基础，结合美国已有和正在建设 IGCC 的经验，进行 IGCC 的系统集成优化技术研究。

Study on the integration, optimization and modular design of IGCC system based on: 1) the

existing research basis and demonstration experience of the first IGCC plant currently under construction in China and 2) the experience of both existing and under construction IGCC in the U.S.

（1） IGCC 气化岛系统集成优化技术

Integration and optimization of gasification island

（2） IGCC 燃机岛系统集成优化技术

Integration and optimization of GT power island

（3） IGCC 发电系统集成优化技术

Integration and optimization of overall power plant system

子任务 2. 基于 IGCC 的燃烧前 CO2 捕集关键技术研究

Subtask 2. Development of Key Components in Pre-combustion CO2 Capture Process

通过 IGCC 系统旁路，设计从煤气变换、CO_2/H_2 分离、H_2 的燃烧和发电、CO_2 压缩和利用完整的工业级燃烧前 CO_2 捕集和利用系统的方案；围绕系统，组织关键技术的开发

Design and construct the slipstream-scale pre-combustion CO_2 capture and utilization system by extracting a slip stream syngas from an existing IGCC plant, which includes water gas shift, CO_2/H_2 separation, H_2 combustion/power generation, CO_2 compression and utilization.

（4） 燃烧前捕集（水汽变换和分离过程）对 IGCC 系统影响的研究

Study the operational impact with various WGS technologies and CO_2 separation process on IGCC system performance

（5） 基于 IGCC 的燃烧前 CO_2 捕集和封存技术的研发，以及膜分离技术研究

Develop the pre-combustion CO_2 capture and storage technology based on IGCC technology including membrane research

（6） 中美两国基于 IGCC 燃烧前 CO_2 捕集技术的对比研究

Conduct technical comparison on the pre-combustion CO_2 capture technologies developed by both countries

子任务 3. CO2 吸收剂及工艺的开发与评价

Subtask 3. Capture Reagent and Process Development and Evaluation

通过现有 CO_2 吸收剂选择及新型吸收剂开发，提高吸收能力，降低能耗；同时，针对该任务中吸收剂制定合适的反应过程。

Screen existing chemicals and develop new formula for capture reagent that will have high working capacity and less energy consumption; meanwhile, suitable process will be developed for advanced absorbents recommended in this task.

（7） CO_2 固体吸收剂的研制与开发

Development of CO_2 solid absorbent

（8） 单组分与多组分胺的吸收特性研究

Study on the absorption characteristics of one-component and multi-component amine systems

（9） 反应器中多相流动研究及反应器设计研制

Research on multiphase flow and reaction in reactors along with the design and development of reactors

子任务 4. 电厂与燃烧后 CO2 捕集系统的集成与运行优化

Subtask 4.System Integration and Operation Optimization of Power Generation with Post-Combustion Carbon Capture System (CCS).

已有电厂中 CO_2 吸收剂再生温度以及蒸汽品味的匹配越来越受到关注，特别是当负载发生变化时。

There is increasing concern on the mismatch between solvent regeneration temperature and steam quality available in an existing PC plant, particularly during load changes.

（10） CO_2 捕集系统与发电系统的匹配关系及运行优化方案研究

Study the relationship between the CO_2 capture system and the power generation system by simulation, and propose the optimum operation parameters to reduce energy consumption and investment.

（11） 开发 CO_2 捕集均相催化剂，解决 CO_2 捕集过程中反应速率与焓变的不匹配

Identify homogeneous catalyst for CO_2 capture to overcome the unmatched characteristic between reaction rate and reaction enthalpy change in the CO_2 capture process.

（12） 中美两国燃烧后 CO_2 捕集技术的对比研究

The technical comparison on post-combustion CO_2 capture for both countries.

子任务 5. 100 万吨/年级燃烧后 CO2 捕集及利用系统可行性研究

Subtask 5. Feasibility Study of the 1 Million Tons/year Post-combustion CO2 Capture systems.

根据华能集团上海石洞口 12 万吨/年捕集装置的长时间运行经验，进行 100 万吨/年燃烧后 CO_2 捕集系统设计、优化和可行性研究

Conduct 1 million tons/year post-combustion CO_2 capture system design, optimization and feasibility studies using experience obtained from long-term operation of MEA-based 120,000 ton/year Unit at Shanghai owned by Huanang Group in China.

（13） 技术评价与选择

Technical evaluation and selection

（14） 流程设计、模拟和优化

Process design, simulation and optimization

（15） 关键部件和系统集成的可行性研究

Engineering feasibility study of key components and system integration

子任务 6. CO2 吸收/吸附剂的研制与评价

Subtask 6. Capture Reagent/sorbents Development and Evaluation.

典型的溶剂吸收法常采用胺基溶液作为工业燃料和气体的 CO_2 吸收溶剂。但是，该技术尚未应用于燃煤电厂烟气中大量 CO_2 的脱除。同时，采用 MEA 法分离 CO_2 会导致电厂发电量降低 30%，相当于增加了 86%的发电成本。显然需要开发一种低能量消耗的吸收剂。遗憾的是，吸收剂能耗降低意味着低的反应速率，会显著增加资金成本。

Solvent-based systems, typically employing amine-based chemical solvents are used

commercially for scrubbing CO_2 from industrial fuel and process gases. However, this technology has not been applied for removing large volumes of CO_2 typically encountered in flue gas from a PC-fired utility. On another hand, the energy required for CO_2 capture and sequestration using MEA is estimated to reduce a PC plant's output by about 30 percent, which equates to a substantial 86% increase in the cost of electricity. It will be obvious that solvents with low energy consumption are needed. Unfortunately, the energy savings from solvents correlates to lower reaction rates for CO_2 capture, thus significantly increasing capital cost.

（16） 单组份与多组分胺的吸收特性研究，高效 CO_2 吸收溶液开发；

Study on the absorption characteristics of one-component and multi-component amine systems, and formula advanced CO_2 absorption solution

（17） 高温固体 CO_2 吸附剂研究与开发

Research and development of solid sorbents for high temperature CO_2 adsorption.

（18） 开发碳富集过程，降低再生塔尺寸和能量消耗

Develop a carbon enrichment process to minimize the stripper size and energy consumption

子任务 7. 富氧条件下典型煤种的燃烧及污染物生成特性

Subtask 7. Fuel Characterization and HAPs Emission study Under Oxyfuel Conditions.

选定中美典型煤种（包括褐煤、烟煤、贫煤等），进行富氧条件下着火、燃烧及污染物生成特性实验，建立基础数据库，并建立相关的数值子模型，以利于后续设计及中试试验。

Fundamental combustion experiments on ignition, combustion and HAPs emissions under oxyfuel combustion for selected Chinese and U.S. coals (lignite, bituminous, lean and anthracite) will be conducted. Data collected will be used to build a database and incorporated into a computational fluid dynamics model for subsequent design and scale-up purposes.

（19） 采集并分析不同煤阶的中国和美国典型煤样；

Analysis of representative samples of different ranks Chinese and U.S. coals

（20） 进行富氧燃烧条件下煤粉热解、着火、燃烧、燃尽特性和 NOx、PM2.5 等污染物生成特性等基础实验研究，建立相应的基础数据库；

Experiments on characteristics of coal pyrolysis, ignition, combustion, burn off, dust stratification, slagging and deposition in bench-scale facilities. Tests on NOx formation and destruction, PM2.5 emission and control. Set up a basic database

（21） 建立富氧燃烧条件下煤粉燃烧和 NOx 生成的机理性模型，并将其耦合到综合数值模拟程序中（华中的 FURN, BW 的 COMO），为后续的燃烧器和氧气注入方式等的优化设计提供工具；

Develop and implement reaction chemistry sub-models on combustion and NOx formation under oxy-combustion condition in the codes (FURN, HUST; COMO, B&W). Develop Burner and Optimize oxygen injection.

子任务 8. 富氧燃烧中试系统运行实践及数值优化

Subtask 8. Pilot-Scale Oxyfuel Combustion Evaluation and Optimization.

在中方 3MW 全流程试验台和美方 1.8MW 小型锅炉模拟器（SBS）上，进行富氧燃烧的适应性考核和数据收集、运行优化等；

Proof of concept tests will be performed at the 1.8 MW_{th} scale in the B&W Small Boiler Simulator (SBS) pilot facility and HUST 3MW Full Chain System (FCS).

（22） 选用几种中美典型煤种，在双方的中试台架上进行中试试验研究；

Carry out pilot-scale tests in the SBS and HUST FCS using selected Chinese and U.S. coals

（23） 新型燃烧器燃烧性能及烟气循环（如热循环、冷循环、干循环、湿循环）流程优化；

Configure the SBS pilot facility and HUST FCS for the optimum oxy-combustion flue gas recycling process (e.g. warm-recycle, cool-recycle, or cold-recycle) using the new burner design

（24） 收集各工况下燃烧、传热、炉膛出口烟气温度以及污染物排放数据；

Collect performance data on combustion, heat transfer, furnace exit gas temperature, and emissions over a wide range of practical operating conditions

（25） 对于选定的工况和燃烧器设计进行综合数值模拟和验证，基于模拟、试验数据优化设计。

Select the most promising design based on modeling predictions and performance criteria for further demonstration

子任务 9. 全流程稳态和动态过程的建模与仿真优化

Subtask 9. Steady-State and Dynamic Process Modeling Simulations

比较稳态和非稳态条件下的中试试验测定数据及模型模拟数据，保证其规模放大至商业化的承接性

Pilot-scale measurements and process model predictions under steady-state and transient operations will be compared to ensure readiness for scale-up to commercial size.

（26） 将中试实验数据与数值模拟预测数据进行对比；

Compare ASPEN Plus static predictions with pilot-scale data

（27） 利用 ASPEN plus dynamics 模拟富氧燃烧非稳态过程；

Use ASPEN Plus Dynamics to simulate transient oxy-combustion processes

（28） 确定和调整动力学模型过程，开发控制方案，包括启炉、停炉、工况调节、切换以及单元调整（含锅炉， ASU，和 CPU 等）。

Validate and tune the dynamic process model toward developing a control strategy for startup, shutdown, modulations, and unit trips (e.g., boiler, ASU, CPU, etc.)

子任务 10. 大规模工程应用可行性研究

Subtask 10. Feasibility Study for Large Scale Deployment

（29） 200MW 以上级别富氧燃烧锅炉机组的热力计算方法及其放大规律；

Design calculation for larger boiler unit at near-commercial scale. Oxy-combustion retrofit engineering study with the possibility for actual commercial-scale demonstration

（30） 典型墙式对冲锅炉进行富氧燃烧改造的技术预可研；

Conduct an engineering study of a reference wall-fired pulverized coal burning unit for oxy-combustion retrofit

（31） 空分，锅炉岛，压缩和净化单元，以及电站平衡的性能和过程设计。

Perform unit and process design of the air separation unit, boiler island, compression and purification unit, and the balance-of-plant

4. 任务组织（五年计划）

Roles and Responsibilities of Leads, Performers, Partners (full five year plan)

中美合作者将根据现有的研发基础条件和研发需求，联合组织技术队伍，就任务描述中所列关键领域开展合作研究。中方的华能集团清洁能源技术研究院和华中科技大学、美方的肯塔基大学将分别牵头各自的团队。

The Chinese and American collaborators will form a joint technical team based on current conditions and future demand, and will carry out collaborative research in key areas as listed in Point 3. Huaneng Clean Energy Research Institute, Huazhong University of Science and Technology, and U.S. University of Kentucky will be the leading entity of Chinese and US work teams, respectively.

	China										U.S.									
	CHNG -CERI	HUST	THU	CPECC	CPI	ZJU	CUMT	NWU	HIT	CEP-CAS	UKy	LLNL	LANL	NETL	WVU	B&W	Duke	AEP	ALSTOM	GE
Task	⊗	⊗									⊗									
Task 1	⊗				×						×						⊗			×
Task 2	⊗		×								×	×	⊗	×			×			×
Task 3	⊗		×		×					×	⊗			×						×
Task 4	⊗						×				⊗			×		×	×	×	×	
Task 5	⊗			×							⊗						×	×		
Task 6	⊗		×		×	×	×	×			⊗	×	×	×		×	×	×	×	×
Task 7		⊗	×						×					×		⊗				
Task 8		⊗	×											×		⊗			×	
Task 9		⊗	×	×											⊗	×			×	
Task 10		⊗	×													⊗			×	

注：⊗ 任务负责　　× 任务参与　　Note: ⊗ subtask director　× subtask participator

美方说明：

For US-side ONLY

已资助（绿色）：是指对已有明确的任务和可交付结果的研究内容；美方 ACTC 有执行人员，预算或资源。

Active (Green): Active program is one where the US-ACTC has committed staff, budget, or resource with defined tasks and deliverables.

相关的（黄色）：是指该研究对美方团队有高度吸引力并且相信美方在短期内会有资助的可能。

Associated (Yellow): These are areas of high interest to the US team, and where we believe there may be a near-term ability to commit in-kind or sponsored effort yet to be determined. These are areas where we would be active if we had the budget or time to prepare.

5. 研究基础

Equipment, Resources, Sites, Facilities, Materials to be Supplied

（1）. 肯塔基大学（UKy）

University of Kentucky (UKy)

肯塔基大学将会提供使用以下实验设施：

UKy will provide access to equipment including:

- 湿壁系统，由气体计量设备、加热系统、气体饱和水浴、溶液容器、套层的大气压力柱、泵、CO_2 分析仪、LabView 控制和数据采集单元组成。

  Wetted wall column system, which consists of a metering gas supply device; heating system, water bath for gas saturation, solvent reservoir, jacketed atmospheric pressure column, pumps, CO_2 analyzer, and a LabView control and data acquisition unit.

- 气液平衡设备，由气体计量供气设备、热油加热器、LabView 控制和数据采集单元、恒温高压的带天蓝宝石色窗口的 PARR 高压容器和带高压容器的 Agilent 7890A 气相色谱分析仪组成。

  Vapor liquid equilibrium (VLE) apparatus, which consists of a metering gas supply device, hot-oil heater, LabView control system and data acquisition system, thermostated high-pressure PARR autoclave installed with a sapphire window, and an Agilent 7890A gas chromatograph integrated with the pressurized vessel.

- 1.5 英寸 CO_2 微型吸收塔，由 3.8cm 内径和 0.61m 长的容器加柱状填充物、两个液体容器、一个液体计量泵、一个 CO_2 分析仪、气体计量供气设备和 LabView 控制和数据采集单元组成。

  1.5-in. bench-scale CO_2 mini-scrubber, which consists of a 3.81-cm (1.5-in.) ID and 0.61-m (2-ft) long column packed with Raschig rings (nominally 6 x 6 mm), two liquid reservoirs, a liquid metering pump, a CO_2 gas analyzer, a supply metering gas supply device, and a LabView system for control and data recording.

（2）. 巴伯可 威尔考克斯（B&W）

Babcock & Wilcox (B&W)

BWRC 位于俄亥俄州巴伯顿，2006 年投入使用，是 B&W 最新的研究机构。它拥有最先进的实验室工业中试装置，为 R&D 和化石能源和可再生能源转换和环境控制的商业化服务。主要实验室包括燃料和燃烧（动力学、激光诊断）、材料和制造方法（焊接、腐蚀），减排（NOx, SO_2, PM, Hg）和温室气体控制（CO_2）。总体来讲，它拥有十二专业实验室，四个工业小试系统。过程建模和模拟包含在各项实验活动中。

The BWRC is located in Barberton, OH and is B&W's newest research facility, opened in 2006. It contains state-of-the-art laboratories and pilots for R&D and commercialization of energy conversion and environmental control technologies for fossil and renewable energy. Major labs include: fuels and combustion (kinetics, laser diagnostics), materials and manufacturing methods (welding, corrosion), emissions reduction (NOx, SO_2, PM, Hg), and greenhouse gas control (CO_2). In all, the facility has twelve focused laboratories and four pilot scale systems. Process modeling and simulation is incorporated into all the lab activities.

B&W PGG 拥有一系列先进的富氧燃烧测试设备，从可以提供单个煤粉颗粒的 EFR 反应器到 1.5 MWth 小型锅炉模拟器（SBS）和 30 MWth CEDF。

B&W PGG has a range of state-of-the-art oxy-coal test facilities, from the Entrained-Flow Reactor (EFR) capable of feeding single coal particles, to the 1.5 MW_{th} Small Boiler Simulator

(SBS), and the 30 MWth CEDF

- SBS-II: 这个小型锅炉模拟器完全集成在小型的燃烧和排放物控制半工业化系统里，它可以使 B&W 为潜在的商业应用评估不同的燃料、燃烧过程和空气污染控制设备。小型锅炉复制了商业应用的锅炉的几何尺寸，它可以使研究者通过比例放大研究结果为商业应用提供数据。这个 600 万 Btu/h 设备的主要部件有：炉子、对流传送、燃料准备和处理、氧化剂传输系统和排放物控制设备。（PM, FGD, SCR）

  SBS-II (Small Boiler Simulator): The small boiler simulator is a totally integrated small-scale combustion and emissions control pilot that allows B&W to evaluate various fuels, combustion processes, and air pollution control devices for potential commercial use. The SBS replicates the geometry of a commercial boiler, thereby enabling researchers to scale the test results for utility and industrial applications. Major components of the 6-million Btu/h facility are: furnace, convection pass, fuel preparation and handling, oxidant delivery system, and emissions control equipment (PM, FGD, SCR).

这个小型的系统可以再现在空气/氧气模式下煤的燃烧来评估煤混合物的转化过程，评估燃烧产物对 CO_2 捕集或排放控制标准的影响，这将提供综合的解决方法。这套设施有足够的空间来添加新的下游组件，来测试和验证它们在建造全尺寸的示范装置之前。

The small scale pilot can replicate coal combustion in an air or oxy–mode to evaluate the conversion process of coal blends, and evaluate the effects of combustion products on CO2 capture or criteria emissions control, which will lead to integrated solutions. The facility has the necessary space to add new and novel downstream technology components to test and validate prior to full scale field demonstrations.

- CEDF: CEDF 是一个高度集成的工业试范的燃烧和排放物控制实验设施，建立于 1984 年，坐落在俄亥俄州阿莱恩斯。这套系统设计功率是 30 MWth 输入，用来燃烧煤、油和气；煤、油和气通过单一燃烧器进入炉子和对流流出，这样来模拟全尺寸锅炉。

  CEDF (Clean Environment Development Facility): The CEDF is a fully integrated large-scale combustion and emissions control pilot facility at B&W's research location in Alliance, OH, built in 1984. The system is designed for 30 MWth input (100 million Btu/h) from coal, oil or gas with a single burner into a furnace and convection pass that simulates a full scale boiler.

2007 年，B&W 将这个 30 MWth 的 CEDF 改造成可以做富氧燃烧实验的系统。这套设备已经拥有测试接近全尺寸的燃烧器的能力。这个燃烧器被置于一个锅炉里。这个锅炉被设计成可以提供通过对流通道的气体温度轮廓分布，这准确的反映了商用锅炉的特征，还提供了对商用领域可用的排放控制设备包括静电除尘器和布袋除尘、湿型吸收塔和全流的干型解析塔近乎全面的补充。为了测试富氧燃烧，湿型吸收塔升级成一个全流程的系统，添加了一个氧气供给系统，增强了煤准备设备来提供各种尺寸大小的煤粉的能力（包括煤干燥和直接燃烧）。

B&W converted the 30MWth (10 MWe equivalent) Clean Environment Development Facility (CEDF) into an Oxygen Combustion test capable system in 2007. This facility already had the capability to test a near full scale burner in a boiler designed to provide a gas temperature profile through the convection pass that accurately reflects commercial boilers and provides nearly a full

complement of emissions control equipment available in commercial sites including electrostatic precipitator or baghouse, a slip stream wet scrubber, and full flow dry scrubber. For the purposes of the oxyfuel combustion testing, the wet scrubber was upgraded to full flow, an oxygen supply system added, and enhancements made to the coal preparation equipment to provide capability for the full range of coals (including coal drying and direct firing).

（3）. 华中科技大学

Huazhong University of Science and Technology (HUST)

华中科技大学从 20 世纪 90 年代中期即开始碳捕获的研究，当时富氧燃烧的研究刚刚起步。从 2005 年开始，华中科技大学先后主持中国大部分关于富氧燃烧方面的研究项目，包括国家科技部的 973 计划课题、863 计划课题等。目前已经建成一座 300kW 富氧燃烧试验台架，接下来 3MW 中试试验台架也即将建成。此外，华中科技大学也是 35MWth 富氧燃烧示范项目的牵头单位，将于 2014 年前在建成中国第一台中试规模的富氧燃烧示范电站。同时，华中科技大学在化学链，气化，固相 CO_2 捕获，EOR 传输机理等方面也进行了大量的研究工作。

The carbon capture activity of HUST can trace back to mid of 1990s, when investigations on oxy-fuel combustion were started. After 2005, HUST has lead or coordinated most of oxy-combustion research and development activities in China, by funds from 973 and 863 projects of MOST. It has built up a 300kW oxy-combustion facility and a larger 3MW pilot coming soon. HUST is furthermore the coordinator of the $35MW_{th}$Oxyfuel demonstration project, which is aim to build the first pilot scale demonstration plant in China before 2014. HUST also active in research and development of Chemical looping, Gasification, CO_2 capture by solids, and transport mechanism of EOR etc.

华中科技大学将提供以下实验设备包括：

HUST will provide access to equipment including:

- 3MW 富氧燃烧全流程系统（FCS），包括空气分离单元，前墙点火布置的燃烧炉系统，烟气净化装置，CO_2 压缩和纯化装置，以及 DCS 控制和数据采集单元等。
  3MW full chain system (FCS) of Oxyfuel Combustion, which consists of air separation unit, refractory furnace including front-wall firing system, flue gas cleaning facilities, CO_2 compression and purification units, and DCS control and data acquisition unit.
- 平焰夹带流反应系统（FF-EFR），它是由内径为 7.2cm 高度 1m 的管式反应器组成，Mackena 平焰燃烧器组成的内圈和外圈，在炉内与油冷却和快速采样探头淬火，旋风收集器和过滤粒子，Horiba VA3000 带有特殊稀释系统设计的烟气分析仪。
  Flat flame supported entrained flow reactor (FF-EFR) system, which consists of a 7.2-cm ID and 1-m tall reactor tube, Mackena flat flame burner with inner and outer rings, in-furnace sampling probe with oiled cooling and fast quenching, cyclone and filter particle collector, and an Horiba VA3000 flue gas analyzer with specially designed dilution system.

（4）. 华能集团清洁能源技术研究院（CHNG-CERI）

Huaneng Clean Energy Research Institute (CHNG-CERI)

中国华能集团拥有“煤基清洁能源技术国家重点实验室”（国家科技部授牌）和“国家能源煤清洁低碳发电技术研发中心”（国家能源局授牌），拥有完备的试验设备和研发团队。在

国家“十一五”863 计划的重大项目的支持下，中国华能集团正在天津临港工业园区内建设国内首台 250MWe IGCC 示范工程，将于 2011 年初建成投产；“十二五”期间，目标建成 400MWe 级整体煤气化联合循环发电（IGCC）示范电站；“十三五”期间，拟建成 400MWe 级绿色煤电示范电站，形成自主知识产权的绿色煤电技术，为大规模商业化做好技术准备。华能集团清洁能源技术研究院从 2004 年开始研究基于 IGCC 的燃烧前 CO_2 捕集技术。2009 年，华能清洁能源研究院与美国 Duke 能源合作，为 Duke 正在印第安纳州建立的 630MW IGCC 的 CCS 项目进行前期技术的开发；2009 年底，华能清洁能源研究院为美国 futurefuel 正在美国宾州建立的 300MW 级 IGCC 的 CCS 做前期研究工作；2009 年，华能集团与杜克能源公司已签署合作备忘录，计划共同开发各种可再生能源和清洁能源技术，包括碳捕集与封存等。

China Huaneng Group is supported by the "State Key Laboratory of Coal-based Clean Energy" and the "National Energy Technology Center for Clean, Low-carbon Coal-fired Power generation", with a complete test equipment and research and development team. With the support of the National Eleventh Five-Year 863 Plan, Huaneng Group is constructing the China's first 250MWe IGCC demonstration project in Tianjin Harbor Industrial Park, which will be put into operation in early 2011. In "Twelve Five" period, Huaneng Group's goal is to build 400MWe IGCC demonstration power plant. In "Thirteen Five" period, Huaneng Group plan to build 400MWe level green coal demonstration power plant, to form the independent intellectual property rights of the green coal technology, and to make technical preparations for large-scale commercial operation. Huaneng Clean Energy Research Institute has been studying on the pre-combustion CO_2 capture technology from 2004. In 2009, CHNG-CERI cooperated with Duke Energy Corporation for the early technology development of the CCS project based on the 630MW IGCC in Indiana in US. At the end of 2009, CHNG-CERI did the preliminary research of the CCS project based on the FutureFuel Corp’s 300MW IGCC of in Pennsylvania in US. In 2009, China Huaneng Group and Duke Energy have signed a cooperation memorandum, plan to jointly develop a variety of renewable energy and clean energy technologies, including carbon capture and storage.

中国华能集团清洁能源技术研究院与美国劳伦斯利弗莫尔国家实验室也于 2009 年签署了关于 CCUS 等方面的合作备忘录，将在碳捕集和碳封存、整体煤气化联合循环、煤气化和转化等专业领域结成合作伙伴，开展技术交流与合作。华能集团清洁能源技术研究院是华能集团的重点研发单位，组织实施了华能北京热电厂 3000 吨/年 CO_2 捕集项目，华能上海石洞口二厂 12 万吨/年 CO_2 捕集项目，并建立了华能北京温室气体捕集与处理实验室，华能上海电气温室气体减排研究中心等研发机构。经过两个 CO_2 捕集示范工程的实施和长周期的示范运行，中国华能集团清洁能源技术研究院形成了具有自主知识产权的燃煤电厂 CO_2 捕集技术及整套设计能力，初步掌握了示范装置的运行方法，具有良好的合作基础和合作能力。

Huaneng Clean Energy Research Institute and Lawrence Livermore National Laboratory also signed a memorandum of cooperation in CCUS areas in 2009. They will be into partnership and carry out technological exchanges and cooperation in carbon capture and sequestration, integrated gasification combined cycle, coal gasification and other professional fields. As the key R&D units of Huaneng Group, CHNG-CERI organized the implementation of the Huaneng Beijing Thermal Power Plant of 3,000 tons / year CO_2 capture project and the Huaneng Shanghai Shidongkou Plant 120,000 tons / year CO_2 capture project, established the Huaneng Beijing Greenhouse Gas Trap and Processing Laboratory and the Huaneng Shanghai Research Center of Greenhouse Gas Emission Reduction R&D Institutions. After the implementation and long-period operation of the

two CO_2 capture demonstration project, CHNG-CERI has independent intellectual property rights of CO_2 capture technology, complete design capabilities, operating methods of demonstration plant, and a good foundation for cooperation and collaboration. CHNG-CERI will ensure the smooth implementation of the project.

（5）. 清华大学

Tsinghua University (THU)

清华大学从实验和建模、模拟方面，针对煤的富氧燃烧理论展开了深入和多尺度的研究。依托于热科学和动力工程教育部重点实验室，拥有具有国际先进水平的实验和测试平台，包括丝网反应器、多元扩散燃烧器、高温一维炉、加压滴管炉、高压对冲火焰等燃烧实验平台，以及高压固定床/流化床反应器、输运床气化等气化实验平台，激光燃烧诊断系统(激光诱导白炽光 LII、平面激光诱导荧光 PLIF)、Stoke 数积灰取样枪、高温气溶胶取样枪、颗粒在线分级取样系统等实验手段，以及等离子体发射光谱仪、色谱仪、质谱仪、电子能谱仪、红外光谱仪、拉曼光谱仪等用于表征物质化学组成的先进仪器，扫描电镜、透射电镜、比表面积分析仪等用于表征颗粒物理结构的专用仪器，热重分析仪、努森池-质谱仪、显微拉曼光谱-流动反应体系等研究反应特性的仪器。

Tsinghua University takes a broad, multidisciplinary approach to oxy coal combustion, with especially in aspect of experimental and theoretical studies on fundamental research on oxy-coal combustion theory, ash formation, ash deposition and system simulation. A series of experimental tips for combustion oxy-coal combustion have been established, such as wire-mesh reactor, multi-elemental diffusion flame burner, down-fired combustor, Advanced analytic instruments have been developed, such as laser combustion diagnostic system(LII, PLIF)，Stokes ash deposition sampling probe, ICP-AS/AES, TEM, TGA etc.

（6）. 中国电力投资集团公司（CPI）

China Power Engineering Consulting Group Corporation (CPECC)

中国电力投资集团公司多年来在先进洁净煤发电技术、二氧化碳捕集技术和利用技术等方面积累了丰富的商业化前期实践研究和工程实践经验，其属下的中电投远达环保工程有限公司（下简称远达公司）重点对碳捕集与资源化利用开展了研究。远达公司目前已完成国内首台燃烧后万吨级 CO_2 捕集及液化装置建设并正开展试验研究；搭建了 CO_2 小型吸收实验台架，开展了 CO_2 吸收剂的理论研究和吸收性能实验研究；开展了各种合成气脱硫脱碳技术调研工作，完成了 IGCC 示范工程煤气净化初可研报告，为开展 IGCC 工艺条件下合成气二氧化碳吸收的模拟实验研究，探索高吸收率、低解析能耗的吸收剂配方创造了良好的软、硬件条件。

China Power Engineering Consulting Group Corporation (CPECC) is the largest corporation for electric power planning, survey and engineering in China, which undertakes more than 50% of thermal power plant engineering design in China. CPECC has completed the engineering design of the first coal-fired power plant CO_2 capture demonstration of 3,000 tons / year in China (Huaneng Beijing thermal power plant), and the largest coal-fired power plant CO_2 capture project design of 120 thousand tons / year(Huaneng Shanghai Shidongkou power plant), which both have put into commercial operation. CPECC sets up an IGCC technology center, which is committed to the research on clean coal utilization, low-carbon technology. CPECC has rich experience to contribute to this project.

（7）. 中国电力工程顾问集团公司（CPECC）

Research Center for Clean Energy and Power, Chinese Academy of Sciences (CEP-CAS)

中国电力工程顾问集团公司是我国电力行业设计单位，承担了我国 50%以上的火电工程设计，完成了国内首台燃煤电厂 CO_2 捕集示范工程——华能北京热电厂 3000 吨/年 CO_2 的设计，完成了国内最大的燃煤电厂 CO_2 捕集工程——华能上海石洞口二厂 12 万吨/年 CO_2 的设计，均投入商业运行。集团公司下设 IGCC 技术中心，致力于清洁煤利用、低碳技术的研究。公司具有丰富的经验贡献于此项目。

Research Center for Clean Energy and Power, Chinese Academy of Sciences, has been carrying out research on direct hydrogen production from coal, fuel flexible gasification, performance optimization of carbon absorbent and oxygen carrier, experiment and simulation of gas-solid multiphase flow. PTGA, GC, GC-MS, high pressure fixed-bed and fluidized-bed reactors, 5 TPD test facilities of fuel flexible gasification, and series of cold test rigs are available for various R&D. There are Aspen Plus, gPROMS, Fluent etc. modeling platforms for conceptual design, optimization, and performance evaluation.

（8）. 中国科学院能源动力研究中心（CEP-CAS）

Research Center for Clean Energy and Power, Chinese Academy of Sciences (CEP-CAS)

中国科学院能源动力研究中心在煤直接制氢、密相输运床气化、CO_2 吸收剂性能优化、载氧体性能优化、气固流动、数值模拟等方面进行了大量研究工作。拥有连续式直接制氢实验系统、输运床小试热态装置、大型冷模装置等试验平台，加压热重仪、气相色谱、气质联用仪等仪器设备，以及 Apsen Plus、gPROMS、Fluent 等数值模拟软件，为本项目研究提供了基础。

Research Center for Clean Energy and Power, Chinese Academy of Sciences, has been carrying out research on direct hydrogen production from coal, fuel flexible gasification, performance optimization of carbon absorbent and oxygen carrier, experiment and simulation of gas-solid multiphase flow. PTGA, GC, GC-MS, high pressure fixed-bed and fluidized-bed reactors, 5 TPD test facilities of fuel flexible gasification, and series of cold test rigs are available for various R&D. There are Aspen Plus, gPROMS, Fluent etc. modeling platforms for conceptual design, optimization, and performance evaluation.

（9）. 浙江大学（ZJU）

Zhejiang University (ZJU)

浙江大学能源清洁利用国家重点实验室主要从事化石燃料高效利用和污染物控制以及生物质、太阳能技术研究和开发，在 CO_2 捕集研究方面已经有 20 多年历史，主要从事化学吸收、膜吸收、吸附、富氧燃烧技术研究，曾负责和参加了国家 863、自然科学基金、中欧 COACH、中英 NZEC 合作项目，已经建立了 200NM^3/h 化学吸收试验台，20NM^3/h 膜吸收试验台，4MWth 富氧燃烧试验台以及烟气分析仪、色质联机、空隙分析仪等大型设备和仪器可用于本项目研究。

Institute for Thermal Power Engineering of Zhejiang University is a State Key Lab of Clean Energy Utilization, who mainly focuses on high efficiency utilization of fossil fuel and pollution emission control, biomass and solar energy utilization technology development. The institute has more than 20 years research history on CO_2 capture, which includes chemical absorption, membrane contactor absorption and oxy fuel combustion. The institute has ever been responsible or participant many CCS projects funding by China High Tech (863) Programme, National natural Science foundation, Sino-EU cooperation project (COACH), Sino-UK cooperation project (NZEC), ect. The institute has many lager facilities and instruments for the CCS research, which include 200NM^3/h flue gas chemical absorption test facility, 20Nm^3/h flue gas membrane

contactor absorption test rig, 4MWth Oxy fuel combustion test facility, Gasmet gas analysis, GC-MS, etc.

（10）. 中国矿业大学（CUMT）

China University of Mining and Technology (CUMT)

中国矿业大学在煤炭洗选脱硫净化和 SO_2、CO_2 等温室气体捕集方面有国家重点学科的支撑和较好的研究基础。在 CO_2 高效吸收催化剂开发方面具有完备的先进的大型分析仪器和实验研究条件，如先进的 CO_2 吸收整套装置及测试评价平台，红外光谱分析仪，质谱分析仪，气相色谱分析仪，液相色谱分析仪，GC/MS 联用分析仪，GC/IR 联用分析仪，IR/MS 联用分析仪，离子色谱分析仪，高速动态分析仪，元素分析仪，X 光射线分析仪，荧光光谱分析仪，高倍电子显微镜，光电子能谱分析仪等。

China University of Mining and Technology has a systematic research foundation on desulfurization of coal pre-combustion and SO_2, CO_2 capture underlaid by national key disciplines. There are comprehensive analytical instruments and research techniques' for highly effective absorption catalysts of CO_2 capture including the advanced CO_2 capture and evaluation platform, infrared spectroscopy instrument, mass spectrometry, gas chromatography, liquid chromatography, GC-MS combination, GC/IR combination, IR/MS combination, ion chromatography, high speed dynamic analyzer, elemental analyzer, x-ray diffraction technique, fluorescence spectrometer, high power electron microscope, X-ray photoelectron spectroscopy and completely chemical analytical instrument, and so on.

（11）. 西北大学（NWU）

Northwest university (NWU)

西北大学拥有陕北能源先进化工利用技术教育部工程研究中心和陕西省洁净煤转化工程技术研究中心。工程中心建有煤炭转化利用、碳一化工、二氧化碳减排与综合利用、化工传质与分离、分析与测试等十一个研究室和一个中试基地，有一批先进的精密仪器和中试装置(康塔 AUTOSORB-1C、梅特勒 TG/SDTA851^e、岛津 GC-MS 、Agilent HPLC、岛津红外线 SO2 分析仪、PIV、中试规模的多功能吸收/精馏集成塔（Φ800×1500）、500 升有机合成反应釜等)。近年来本研究团队开展了二氧化碳减排与回收利用技术的研究与开发，承担了国家自然科学基金和博士后基金的研究项目：金属配合物敏化二氧化钛及其光催化还原二氧化碳的研究、CO_2 高温吸附剂开发等方面的研究。西北大学现有的相关实验平台、经验丰富的研究团队为本课题的实施和顺利完成提供了良好的保证。

Northwest university has Chemical Engineering Research Center of the Ministry of Education for Advanced Use Technology of Shanbei Energy, and Shaanxi Research Center of Engineering Technology for Clean Coal Conversion. There are 11 labs in these Centers, including coal conversion and utilization, C1 chemecal technology, CO_2 reduce and utilization, mass transfer and separation, analysis and measurement etc., and there are a lot of advanced instrument and equipment (AUTOSORB-1C, TG/SDTA851^e, Shimadzu GC-MS, Agilent HPLC, Shimadzu SO_2 analyzer, PIV, Tower of multifunction absorb/distillation Ö800×1500, etc.). In recent years, the University has been carrying out the R&D about technologies of CO_2 reduction, capture and utilization, such as research and development of calcium oxide based sorbents for CO_2 adsorption under high temperature and study on photoreduction of CO_2 over metal complexes-sensitized TiO_2-based composites.

（12）. 哈尔滨工业大学（HIT）

Harbin Institute of Technology

哈尔滨工业大学燃烧工程研究所是中国煤粉燃烧及其污染物控制技术研发领域的重要科研机构之一，是燃煤污染物减排国家工程实验室的依托单位。其研究领域覆盖了空气、富氧或水蒸气条件下煤的清洁燃烧和气化，烟气净化，整体煤气化联合循环系统， CO_2 捕存技术，以及生物质热化学转化利用等。

Combustion Engineering Research Institute at Harbin Institute of Technology (CERI-HIT) is one of the leading Chinese organisation in the R&D of technologies for pulverised coal combustion and relevant emission control. It hosts the National Engineering Lab for Reducing Emissions from Coal Combustion. Research areas of CERI-HIT include efficient and clean coal combustion and gasification in the air, oxygen or steam, flue gas cleaning, IGCC system, CCS co-production of chemicals and power, and thermo-chemical conversion of biomass.

哈工大燃烧工程研究所可为本项目提供的科研设施包括：

CERI-HIT will provide access to research facilities including

- 高温携带流反应器（SHEFR），是一套用于研究固体燃料在不同氛围下反应性和制焦的设备。升温速率可达 10^5℃/s，火焰最高温度可达 2000℃，壁面最高温度可达 1600℃；停留时间为 10-2000 ms，反应管内径为 74 mm。给粉速率范围为 1-5 g/h。

  SHEFR (Simulator of High-Temperature Entrained Flow Reaction) is a facility for studying the reaction of solid fuel and for preparing char in the controlled environment. Heating rate 105℃/s, Peak flame temperature 2000℃, Peak wall temperature 1600℃；Residence time 10~2000 ms. Reactor ID 74 mm. Fuel feeding rate 1-5 g/h.
- 多段携带流反应器（EFCM），是一套专门研究煤粉多级分级燃烧过程及其参数优化的设备。采用 7 段独立控温电加热，轴向取样。再燃燃料和吸附剂径向喷入，燃烧器在轴向方向可调。最高壁温可达 1600 ℃，停留时间为 10-4000 ms，炉膛内径 200 mm，给粉速率范围为 1-3 kg/h.

  EFCM (Entrained Flow combustor with Multiple Reaction Segment) is a unique facility for studying the multi-staged combustion process of pulverised coal in a furnace and its optimization. It is electrically heated, 7-segment-indepadently–temperature-controlled, and axially sampled. Reburn fuel and sorbent is radially injected and the burner is axially adjusted. Peak wall temperature 1600 ℃；Residence time 10~4000 ms. ID 200 mm. Fuel feeding rate 1-3 kg/h.
- 燃烧器优化试验台是一套研究热态条件下燃烧器出口区域射流火焰发展机理及燃烧器参数优化的垂直下行燃烧系统。其热功率可达 300KW。炉膛内径 800 mm，炉膛高度 3.84 m。

  Burner Development Facility is a down flow system for studying the evolution of the combustion process at the downstream of burner and optimizing burner configuration and parameters. Thermal capacity 300 kW. Furnace ID 800 mm. Furnace Height 3.84 m.
- 管式沉降炉（DTF）

  DTF (Drop Tube Furnace)

6. 工作计划

Work Schedule with Interim Milestones (Year one, October 2010 – September 30,

2011)

美方清洁煤技术联盟工作计划如下（一年任务）：

The working schedules for US-side ACTC include:

a. 确定中方和美方 CO_2 捕集任务成员（任务 5），开发和详细制定合作模式，定期交流日期为 2011 年 4 月 15 日。（电话或网络会议）

   Identify CO_2 Capture Task (Task 5) members on both the US and Chinese sides; a model for collaboration will be developed and refined; regular communication schedule will begin on April 15, 2011. (telecon or web-meeting)

b. 收集和分析中美两国煤基烟气条件，电站运行和环境需求的异同的一般信息。（2011 年 9 月）

   Collect and analyze the general information regarding the similarities and differences of coal-derived flue gas conditions, power plant operation and environmental requirements between the US and Chinese. (Sept 2011)

c. 成立工作小组建立指导方针/草案/标准。这些主要是对系统优化和评估，膜合成和评估，催化剂选择，中国和美国任务项目成果评估。（2011 年 7 月）

   Form a working group to establish the guideline/protocol/criteria for system optimization and evaluation, membrane synthesis and evaluation, catalyst selection, production and evaluation. (July 2011)

d. 进行膜、系统和经济分析。NETL 将利用成熟的先进的计算流体力学评估膜模块的能力来解决外部质量传递限制和充分利用高效的膜材料。另外，NETL, LANL, 和 LLNL 将与中国方面共同合作，将开发的模块模型通过灵活的系统分析工具应用在多种系统设计概念上来，使我们能够评估广泛的分离系统和电站配置，从而来帮助我们对可选过程整合策略有一个全面的检查。（2011 年 9 月）

   Conduct membrane, systems, and economic analysis. NETL will make use of highly developed capabilities in computational fluid dynamics to evaluate the ability of membrane modules to overcome external mass transfer limitations and take full advantage of membrane materials with very high permeance. Additionally, NETL, LANL, and LLNL will work together with our Chinese counterparts to incorporate the developed module models into various system design concepts using flexible system analysis tools allowing evaluation of a wide variety of separation system and plant configurations in order to facilitate a comprehensive examination of alternative process integration strategies. (Sept 2011)

e. 均相催化剂模型和合成。在这方面，LLNL 将利用分子建模的经验来验证肯塔基大学设计的结构的催化能力和基于溶剂特性的稳定性。量子力学计算将利用密度泛函理论（DFT）功能（B3LYP）与高水平基础设置（6-311+G*）相结合。在数值计算和获得来自 LLNL 的推荐的基础上，该催化剂将在肯塔基大学合成制造并且完成评估。（2011 年 9 月）

   Homogeneous Modeling and Synthesis. In this activity, LLNL will use its molecular modeling expertise to verify the catalytic capability of the structure UKy is considering, and the stabilization due to solvent characteristics. The quantum mechanical calculations will use a density functional theory (DFT) functional (B3LYP) combined with a high level basis set (6-311+G*). Upon the computational results and recommendations from LLNL, candidate catalysts will be synthesized at UKy for evaluation. (Sept 2011)

f. 碳浓度富集过程。这包括建造一个实验室规模的 CDI，采用活性炭作为吸附电极材料，和对从肯塔基大学能源研究中心工业小试装置采集的高碳浓度溶液进行参数化性能评估。参数化研究着重于提高碳浓度的程度和电力消耗。系统整合过程强调溶液脱碳过程中能量回收，从而降低能量耗损。（2011 年 9 月）

Carbon Enrichment Process Development. This Activity will include the fabrication/construction of a lab-scale CDI with activated carbon as adsorptive electrode material, and a parametric performance evaluation using carbon rich solution collected from the CAER pilot-plant. The parametric study will focus on the carbon enrichment performance vs. power consumption. The process integration will emphasize energy recovery to minimize the energy penalty for solvent de-carbonation process. (Sept 2011)

g. 制定第二年的计划。（2011 年 9 月 30 日）

Develop plan for Year 2. (30 September, 2011)

联合工作时间表如下：

The joint working schedule is listed in Table below.

ID	任务	2011年				2012年				2013年				2014年			
		Q1	Q2	Q3	Q4	Q1	Q2	Q3	Q4	Q1	Q2	Q3	Q4	Q1	Q2	Q3	Q4
1	IGCC系统集成与优化																
2	基于IGCC的燃烧前CO2捕集关键技术研究																
3	CO2吸收剂及工艺的开发与评价																
4	电厂与燃烧后CO2捕集系统的集成与运行优化																
5	100万吨/年级燃烧后CO2捕集及利用系统可行性研究																
6	CO2吸收/吸附剂的研制与评价																
7	富氧条件下典型煤种的燃烧及污染物生成特性																
8	富氧燃烧中试系统运行实践及数值优化																
9	全流程稳态和动态过程的建模与仿真优化																
10	大规模工程应用可行性研究																

7. 预期成果

Deliverables and Dates

美方可交付成果是：（仅第一年，2010 年 9 月-2011 年 9 月）

The deliverables for US-side ACTC are (Year one only October 2010- September 2011):

- 建立指导方针/草案/标准。主要是对系统优化和评估，材料选择、合成和评估。
  Guideline/protocol/criteria for system optimization and evaluation, material selection, synthesis and evaluation
- 方在新捕集技术下的任务年终进度报告（任务 5）
  Year-end progress report on US tasks under the Novel Capture Technology (Task 5).
- 制定第二年详尽的工作计划。（2011 年 9 月 30 日）
  Detailed work plan for Year 2 (September 30, 2011)

中方清洁煤技术联盟将通过五年研究工作，取得以下成果：

For China-side ACTC, the following expected results will be achieved through the five-year research program:

- 掌握 IGCC 优化设计技术；

Achieve the optimization and design technology of IGCC system.

- 掌握基于 IGCC 的燃烧前 CO_2 捕集系统关键技术；

  Obtain the key technologies of pre-combustion CO_2 capture based on IGCC technology.
- 开发适合基于 IGCC 燃烧捕集的新型吸收剂。

  Develop new absorbents for pre-combustion carbon capture system.
- 获得 10 万吨/年级 CO_2 捕集系统与电厂系统的运行优化方案；

  10 tons/year post-combustion CO_2 capture system and power plant system operation and optimized solutions.
- 形成 100 万吨/年级燃煤电厂 CO_2 捕集与利用技术方案，形成集 CO_2 捕集与利用技术一体的技术链条；

  Technical solutions of 100 tons/year CO2 capture and usage of coal-fired power plant, a set of CO2 capture and use technology chain.
- 开发适合燃烧后 CO2 捕集的高效吸收/吸附剂；

  Develop efficient reagent/sorbents for post-combustion carbon capture system.
- 富氧燃烧燃料特性报告；

  Fuel characterization report on oxyfuel combustion.
- 富氧燃烧中试报告；

  Pilot scale report on oxyfuel combustion.
- 富氧燃烧工程可行性研究。

  Full scale engineering feasibility of oxyfuel combustion.

8. 预计花费

Estimated Costs (Indicating Level of Effort, Person-Hours Equivalents) (Year one only October 1, 2011 – September 30, 2011)

经美国清洁煤技术联盟提议批准：（可变时间，取决于工作人员小时费用）

As proposed and approved in US-ACTC, (variable hours depending on staff hourly costs)

- 第一年肯塔基大学的预计花费 400K，来自美国能源部。

  Year one costs for UKy on this task will be on the order of 400K from US DOE.
- 第一年 LLNL 的预计花费 110K。

  Year one costs for LLNL on this task will be on the order of 110K.
- 第一年 LANL 的预计花费 115K。

  Year one costs for LANL on this task will be on the order of 115K.

9. 年度报告

Reporting Requirements (Interim Reports, Final)

年度报告将于 2011 年底提交。

Year-end progress report published in 2011.

10. 技术管理

Technical Management

- 组建一支由多学科人员组成的研究团队，化学、化工、与 CO_2 捕集相关的材料科学和工业界伙伴。

  Development of a multidisciplinary team composed of members of the chemistry, chemical engineering and material science associated to CO_2 capture and industrial partners.
- 鼓励成员参加定期邮件、电话或网络对话（每月至少一次），讨论研究方向和共享关于 CO2 捕集方面信息。

  Encourage these members to attend regular (every month minimum) email and telecom or web-based conversations to discuss the path forward and share information relevant to the CO_2 capture Task (5).
- 组织一年一度的 CO2 捕集主题会议。

  Organize yearly topical meetings on the CO_2 capture related tasks.
- 中美双方清洁煤技术联盟管理人员交流，确保数据分享和知识产权。

  Interact of ACTC management to ensure alignment of data sharing and IP concerns.

任务 6: CO_2 地质封存场地评价技术

Task 6: Evaluation technology of CO_2 geological storage sites

8. 任务背景

Task Background

CCS 技术是实现 CO_2 大规模减排的重要手段。相对捕集与输运技术而言，地质封存的安全性及经济性很大程度上取决于场地条件，封存场地的评价与合理选择是 CCS 实施的基础和成败关键。据初步调查，中国的鄂尔多斯盆地、美国的 Illinois 盆地等目标研究区排放源多、封存容量大，封存方式多样、勘探程度较高，分别是中美两国最适合开展大规模 CCS 项目的盆地之一。作为潜在大规模示范封存场地，对其封存潜力与适宜性进行更详细评价是进一步开展 CCS 工程设计和实施的必然要求。

CCS is one of the most attractive technologies of massively reducing CO_2 emissions. The safety and economy of carbon geological storage are largely dependent on the sequestration site conditions. So a prudent evaluation and reasonable selection for sequestration sites is the base of CCS implementation and will determine the results. Ordos basin of China, Illinois Basin of USA and others research regions are the most possible basins for large scale CCS projects in China and USA, with abundant CO_2 emission sources, high storage capacity, various types of storage formations, high degree of exploration, simple geologic structure and ongoing demo project. The potential demo or commercial scale CCS projects in this basin require more detailed CO_2 storage capacity evaluation and suitability investigation.

在中美清洁能源联合研究中心的合作框架下，封存任务整体设计为三个阶段，本项目作为第一阶段课题，将以中国的沁水盆地和鄂尔多斯盆地，美国的 San Juan 盆地、Wyoming 盆地、Illinois 盆地和 Indiana 等地区为研究对象，分别开展煤层、咸水层和油田封存潜力评估以及适宜性区块的优选，并对 CO_2－EOR 的技术方案展开探索，为后续研究和工程示范奠定基础，同时加强对已有示范和实验项目的交叉交流和总结。本任务参与单位已开展了相关的研究和工程示范工作，为顺利完成本研究任务奠定了良好基础。

Under the framework of CERC, Task 5 relating CO_2 geological storage will be divided into 3 stages. As the 1st stage task, this project presented now will conduct the work of methodology and implementation of potentiality evaluation and suitable storage block selection, mapping the optimized blocks including CO_2-ECBM,CO_2-EOR and CO_2 saline aquifer storage in Qinshui Basin and Ordos Basin of China, San Juan Basin , Wyoming Basin, Illinois Basin and others regions in USA. In addition, both sides will enhance the information exchange and research summary of the demonstration or pilot projects in these regions.

执行期：2011.3－2013.12

Executing duration:2011.3-2013.12

9. 任务目标

Objectives

(1) 地质封存领域三批课题的总目标：通过中美合作，掌握和开发地质封存的潜力评价技术、安全风险评估技术、模拟与监测技术；给出研究区域 CCS 封存潜力及适宜性区块编图；对 1-3 个封存适宜性最好的优选区块进行系统深入研究，提出封存工

程实施方案，并对封存方案中存在的关键技术问题提出合理解决方案。

Target of the total 3 stages: Through the cooperation with USA, we both will master the key technology of CO_2 geological storage, enhance the CCS technology exchange and cooperation, and train the professional personnel.

(2) 本任务第一批启动课题的目标：以中美两国若干盆地或研究区域为对象，提出煤层、咸水层和油田封存潜力与适宜性的评价方法，分析研究区的封存潜力，完成封存适宜性地图的编制，为后续研究推荐重点研究区块。开展 CO_2-EOR 先导性实验技术研究；加强已有项目的合作和交流。

Stage 1 target: This project presented now will： conduct the work of methodology and implementation of potentiality evaluation and suitable storage block selection, mapping the optimized blocks including CO_2-ECBM,CO_2-EOR and CO_2 saline aquifer storage in selected basins or research regions both in China and USA，perform the key technology research of CO_2-EOR, and enhance the technology exchanges in both countries.

10. 任务研究内容

Statement of Work (SOW)

(1) 子任务 1：煤层气强化开采示范区地质特征评价

Subtask1：Geological characterization of demonstration regions for CO_2-ECBM and storage

研究对象：沁水盆地, 圣胡安、阿马拉契亚盆地

Research regions: Qinshui Basin, San Juan & Appalachian Basins

- ◆ 从地质及地球物理角度，对煤层封存潜在目标场地进行岩性、构造的综合表征与评价，为 CCS 选址及后续的封存奠定基础。收集并利用三维地震资料，对研究区小断层、裂隙带、煤层及围岩岩性进行预测，给出 CO_2-ECBM 的潜力，定义并探讨其适宜性。

Research Contents:

- ◆ 研究区 ECBM 相关地质与地球物理资料收集

  Fundamental geologic and geophysical data collection for CO_2-ECBM in research regions

  收集研究区 ECBM 相关地质与地球物理资料，充分认识煤层的地质特征。
- ◆ 测井与地震资料处理及解释，建立三维静态地质模型

  Seismic and logging data processing and interpretation；3-D static geological modeling 对测井地震勘探资料进行解释，得到目标煤层的埋藏和构造信息，如煤层深度，盖层及上覆地层的厚度、地质断层等，建立三维地质模型。
- ◆ 研究区 CO_2-ECBM 的潜力评价

  Potential evaluation of CO2-ECBM in research regions

  对整个盆地或重点区块计算 CO_2 封存潜力，煤层气的增产潜力。
- ◆ CO_2-ECBM 选址地质综合评价

  Comprehensive geologic evaluation of CO_2-ECBM site selection

  基于潜在场地的构造发育特征，提出 CO_2-ECBM 选址地质综合评价方法，利用该方法对试验区主要断裂构造的封堵风险及活动性进行评价，对低序次小断层及潜在的裂缝发育带的 CO_2 泄露风险进行评价。推荐潜在 CO_2-ECBM 潜在地层的储盖展布。

(2) 子任务 2：咸水层封存的 CO_2 运移机理

Subtask2：Investigation on storage theory and migration simulation of supercritical CO_2 in reservoir rocks and its geochemical effects.

研究对象：鄂尔多斯, Rock Springs–怀俄明, Gibson 3-印第安纳

Research regions: Ordos Badin, Rock Springs-Wyoming, Gibson 3-Indiana

- 通过岩心尺度的实验室研究和数值模拟，探讨鄂尔多斯封存区域和美方提供区域岩心中的 CO_2-水两相流动规律,，为大尺度数值模拟提供准确的基础数据。

Research Contents:

- 岩芯尺度 CO_2-咸水两相流实验研究

  Core scale experimental investigations on CO_2/brine two-phase flow of the rock from research regions

  以研究区咸水层为对象，开展岩心尺度的实验研究，探索超临界 CO_2 和地层水在岩心中两相流动的规律
- 岩芯和孔隙尺度 CO_2-咸水两相流数值模拟研究

  Core scale and pore scale numerical simulation on CO_2/brine two-phase flow in the reservoir rocks

  超临界 CO_2 和盐水在岩心中两相流动的数值模拟，包括岩心尺度和孔隙尺度。
- 水-岩-CO_2 相互作用机理及其对碳封存的影响

  Mineral-fluid interaction mechanism and their effects on CO_2 storage in brine

  研究超临界 CO_2 注入到地层后的水-岩-气作用机理，及其对封存影响。

(3) 子任务 3：CO_2 咸水层封存潜力与地质适宜性评价技术研究

Subtask3：Potential and geological suitability evaluations technology of CO_2 saline aquifer storage

研究对象：鄂尔多斯盆地, 怀俄明、伊利诺伊盆地

Research regions: Ordos Basin, Wyoming and Illinois Basins

- 提出适合 CO_2 咸水层封存潜力和适宜性评价方法，计算研究区的封存潜力，评价其适宜性，形成封存潜力和场地适宜性编图。推荐优先封存场地，为后续研究奠定基础。

Research Contents:

- 基础地质与地球物理资料收集

  Fundamental geologic and geophysical data collection in demonstration regions.

  收集研究区封存潜力和适宜性评价所需的地质、地球物理和岩石力学等资料。
- 咸水层封存潜力评价方法

  Methodology for potential evaluation of CO_2 saline aquifer storage

  收集并比较国内外 CO_2 咸水层封存潜力评价技术，形成 CO_2 咸水层封存潜力评价方法学。
- 封存场地的适宜性评价方法

  Definition and evaluation methodology for geological suitability of saline aquifer storage site.

  定义封存场地的适宜性，在此基础上进行调研并形成本项目的适宜性评价方法。
- 研究区封存容量计算、适宜性评价与地质有利区块优选

  CO_2 storage capacity and suitability evaluation, geologically preferential storage blocks grading in research regions.

结合研究区地质条件和建立的评价方法，计算研究区封存潜力，评价其地质适宜性，形成潜力和场地适宜性编图；在此基础上推荐优先封存区块，为子任务4及后续研究作参考。

(4) 子任务4：示范区咸水层封存潜力评价及场地综合优选

Subtask4：Grading and selection of suitable saline aquifer storage sites of demonstration regions.

研究对象：鄂尔多斯盆地，怀俄明、伊利诺伊盆地

Research regions: Ordos Basin, Wyoming and Illinois Basins

- 分析研究区主要 CO_2 排放源的分布特征，通过分析和研究咸水层适宜性区块的选择方法和标准，优选出咸水层封存区块，绘制出适宜性区块地图。

Research Contents:

- 研究区 CO_2 主要排放源的调查、统计和分析

  Survey and analysis of the distribution of main CO_2 emission sources in research regions.

  以研究区为对象，调查、统计和分析 CO_2 主要排放源（100 万吨）的分布特征，并预测未来 CO_2 排放的趋势。
- 咸水层封存的区块综合优选原则和方法

  Methodology for comprehensive grading and selection of suitable saline aquifer storage blocks.

  以实现咸水层封存为目标，提出封存选址和区块的原则和方法，建立多因素多条件的评判程序和标准。
- 研究区咸水层封存场地适宜性区块优选及实验区的场地特征描述

  Comprehensive grading and selection based on the geologically preferential saline aquifer storage blocks in research regions and site characterization of test field

  针对研究区 CO_2 源的分布特点、咸水层分布特征和规律、储盖物性、距离、经济性等条件进行排序，并对实验区进行场地特征描述。

(5) 子任务5：示范区 CO_2-EOR 封存潜力与适宜性评价

Subtask5：Potential and suitability evaluation methodology for CO_2-EOR of demonstration regions.

研究对象：陕北示范区中生界油田，怀俄明、伊利诺伊盆地

Research regions: Mesozoic oil field in Shaan-bei region, Wyoming and Illinois Basin

- 分析在现有技术和经济条件下，通过 CO_2-EOR 技术在研究区油田中的实施，对 CO_2 地质封存潜力及适宜性进行研究和评价，为在研究区全面开展 CO_2-EOR 技术实施的基础上，实现 CO_2 地质封存潜力与适宜性提供科学依据和基础数据。

  The feasibility and capability of CO_2 storage are evaluated by performing CO_2-EOR in research regions by the existing technical and economic conditions for supporting scientific theory and base data to the CO_2 storage in these regions.

Research Contents:

- 研究区基础地质、钻井资料和测井资料的收集、处理与标准化。

  Collection, analysis and normalization of geological, well drilling and well logging information

研究区已有的各种基础地质、钻井资料和测井资料的收集、处理与标准化是做好各项其

他工作的基础，更是能否建立符合研究区客观实际地质情况的真实地质模型的关键。该项研究内容的基础在于资料的收集和处理，关键在于能否对不同年代采集的各种地质和测井资料实现符合客观地质实际的标准化。

Collection, analysis and normalization of geological, well drilling and well logging information, are fundamental key works to establish objective geological model and carry out CO_2 storage.

- 研究区油田（藏）的基本地质特征与分布规律

Fundamental geological characterization and distribution of oil field in research regions 通过对研究区若干油田的剖析，研究油藏（田）的基本地质特征，探讨油藏的分布规律及其地质控制因素。

Studies on the fundamental geological characterization, distribution and control factors of oil reservoir in demonstration regions by analysis of several oil filed in these regions.

- 研究区 CO_2-EOR 地质封存潜力与适宜性评价。
  CO_2-EOR potential and suitability evaluations of Triassic Yanchang Formation oilfield in Shanbei demonstration regions.

根据研究区油田（藏）的基本地质特征与分布规律，探讨通过在示范区主要储油层或圈闭中实施 CO_2-EOR 技术，对最终可以在这些主要储油层或圈闭中实现 CO_2 地质封存的潜力及适宜性进行研究与评价。

Based on the geological characterization and distribution of oil reservoirs, the feasibility and capability of CO_2 storage by CO_2-EOR in these regions are evaluated.

(6) 子任务 6：示范区 CO_2-EOR 先导性试验

Subtask6:Field tests of CO_2-EOR pilot project

研究对象：陕北地区，怀俄明、伊利诺伊盆地

Research regions: Shaanbei region, Wyoming and Illinois Basin

- 针对示范区的油藏特点，选定具有代表性的区块，开展 CO_2 驱模拟研究及 CO_2-EOR 先导性试验评价。

Research Contents:

- CO_2 驱试验区筛选与地质模型建立
  CO_2 pilot test site selection and building of geological model.
  进行 CO_2 驱适宜性评价及试验区筛选，并完成试验区油藏地质特征研究及地质模型的建立。
- CO_2-EOR 模拟技术评价研究
  Research on CO_2-EOR simulation technology .
  CO_2—EOR 室内实验评价研究、岩芯驱替实验研究以及 CO_2 驱油影响因素研究。
- CO_2 驱现场先导性技术试验评价研究
  Research on the implementation program for CO_2 –EOR field test.CO_2 驱油藏工程方案研究，注采工艺技术研究，CO_2 驱试验区地面工程技术研究。

11. 任务组织

Project Organization and Schedule

该中方由中国神华煤制油化工有限公司和中国科学院武汉岩土力学研究所牵头，中方任务负责人为任相坤、李小春，技术总顾问为彭苏萍，联络人为崔永君、白冰。中方参加单位有清华大学、中国矿业大学、陕西省能源化工研究院、延长石油集团有限责任

公司。

This task will be lead by China Shenhua Coal to Liquid and Chemical CO.（CSCLC）and Institute of Rock and Soil Mechanics, Chinese Academy of Sciences (RISM）. Chinese heads are Ren Xiangkun from CSCLC and Li Xiaochun from RISM. Peng Suping from China University of Mining & Technology (CUMT) is the Chief technical adviser. Contact persons are: Cui Yongjun from CSCLC and Bai Bing from RISM. Chinese attending units: Tsinghua University., China University of Mining & Technology(CUMT), Shaanxi Institute of energy Resource &chemical engineering(ISECE) and Shaanxi Yanchang Petroleum (Group) Co. Ltd.(YCP).

美方牵头单位为 WVU，负责人为 Tim Carr，参加单位有劳伦斯利物莫尔实验室 LLNL、印第安纳地质调查局 IGS、拉斯阿拉莫斯实验室 LANL、怀俄明大学 UW、怀俄明地质调查局 WSGS、国家能源技术实验室 NETL、太平洋国家能源实验室 PNNL 等。

The leader of USA team is WVU and the head is Tim Carr. The partners include LLNL, UW, WSGS, IGS, LANL, NETL and PNNL.

任务分工表 Task division

Partners from China

单位/负责人 unit 任务 Task	**神华 CSCLC** 任相坤 Ren Xiangkun	**岩土所 RISM** 李小春 Li Xiaochun	**清华 Tsinghua U** 姜培学 Jiang Peixue	**矿大 CUMT** 彭苏萍 Peng Suping	**陕能院 ISECE** 周立发 Zhou Lifa	**延长 Yanchang** 高瑞民 Gao Duanmin
子任务 1 Task 1	×	×		⊗		
子任务 2 Task 2	×	×	⊗			
子任务 3 Task 3	×	⊗	×	×		
子任务 4 Task 4	⊗	×	×			
子任务 5 Task 5	×	×		×	⊗	×
子任务 6 Task 6	×	×			×	⊗

注：⊗ 子任务负责 in charge ×子任务参加 attending

Partners from USA

单位/负责人 unit 任务 Task	**WVU** Tim carr	**LLNL** Walt McNab	**IGS** John Rupp	**LANL** Phil Stauffer	**UW** Ron Surdam	**WSGS** Zunsheng Jiao	**NETL**	**PNNL**
子任务 1 Task 1	⊗						×	
子任务 2 Task 2	×	⊗	×	×	×	×		×
子任务 3	×	×	⊗	×	×	×		

Task 3								
子任务 4 Task 4	×	×	×	⊗	×	×	×	
子任务 5 Task 5				×	⊗	×		
子任务 6 Task 6					×	⊗		

注：⊗ 子任务负责 in charge　×子任务参加 attending

12. 任务研究计划（包括年度计划）

Schedule

- 2011.3－2011.12

  完成各种资料的收集、整理，完成地震资料的野外采集.

  Fundamental geologic and geophysical data collection.

  研究区的地质条件分析

  Experimental investigations on CO_2/brine two-phase flow of the rock from research regions

  研究区 CO_2 排放源分析

  Survey and analysis of the distribution of main CO_2 emission sources in research regions.

  完成研究区封存地中 CO_2 运移规律的实验室实验研究.

  Principle of the CO_2 storage in saline aquifer reservoir

  研究咸水层封存适宜性区块的评价原则.

  Research on CO_2-EOR potential evaluation technology.

  CO_2 驱提高采收率油藏筛选评价方法

  Oil deposits selection and evaluation of CO_2-EOR.

  CO_2驱试验区地质模型建立以及CO_2驱驱替实验研究.

  CO_2-EOR displacement characteristics and lab experiment.

- 2012.1-2012.12

  完成地震资料的处理与解释，并建立研究区的静态地质模型.

  Seismic and logging data processing and interpretation, Construction of 3-D static geological earth model.

  完成封存地中 CO_2 运移规律研究.

  Numerical simulation on CO_2/brine two-phase flow in the reservoir rocks

  研究咸水层封存适宜性区块的评价方法和标准，

  Methodology for CO_2 saline aquifer storage potential, analyze the geological condition.

  研究区油田的 CO_2-EOR 封存潜力评价

  CO_2-EOR potential evaluation of Jurassic Yanan formation oilfield in research regions .

  CO_2驱试验区现场试验方案研究

  Research on the CO_2–EOR technical proposal of field test.

- 2013.1-2013.12

  研究区煤层封存 CO_2 的选址地质综合评价

  Comprehensive geologic evaluation for selecting ECBM site.

  水-岩-CO_2 相互作用机理研究

  Mineral-fluid interaction mechanism and their effects on CO_2 storage in brine

  研究区咸水层封存适宜性区块优选及实验区场地特征描述

  Select preferential saline aquifer storage blocks in research regions and characterization of

test field.

研究区典型油田 CO_2 地质封存与 CO_2-EOR 一体化实施的适宜性评价

The suitability evaluation for integrated implementation of CO_2 storage and CO_2-EOR in typical oilfield in research regions.

CO_2驱现场先导性技术试验评价

Evaluation of the field test of CO_2-EOR pilot project.

编写并提交报告。

Submit the report.

各子任务进度表 Subtasks progress chart

ID	子任务 名称	2011				2012				2013			
		Q1	Q2	Q3	Q4	Q1	Q2	Q3	Q4	Q1	Q2	Q3	Q4
1	煤层气强化开采示范区地质特征评价 Geological characterization of demonstration regions for CO2-ECBM and storage												
2	咸水层封存的 CO_2 运移机理 Investigation of Storage theory and simulation of migration of supercritical CO_2 in reservoir rocks and geochemical effects												
3	CO_2 咸水层封存潜力与地质适宜性评价技术研究 Evaluation technology for CO2 saline aquifer storage												
4	示范区咸水层封存潜力评价及场地综合优选 Methodology of grading and selection of suitable saline aquifer storage sites of demonstration regions												
5	示范区 CO_2-EOR 封存潜力与适宜性评价 Potential and suitability evaluation methodology for CO_2-EOR of demonstration regions												
6	示范区 CO_2-EOR 先导性试验 Field tests of CO_2-EOR												

	pilot project	

13. 合作基础与合作能力

Personal, facilities and Equipment

本课题组研发力量强、专业人员配备合理、研究手段多。课题组拥有在国内从事 CCS 技术的高级专家，专业涵盖了化工、热能、地球物理、煤田和石油地质、油气田开发、岩土力学、系统分析等。中国矿业大学所属的煤炭资源与安全开采国家重点实验室拥有地震技术研究中心，配备曙光高性能计算机群 1 套，清华大学具有岩芯尺度 CO_2 地质封存可视化及定量实验系统，中科院武汉岩土所在 CCS 领域具有岩石力学、渗流等多套实验设备，神华集团已在鄂尔多斯实施了中国第一个全流程 CO_2 咸水层封存示范项目，陕西能源化工研究院将依托西北大学大陆动力学国家重点实验室，其多套大型仪器和设备可用于本课题的研究，陕西延长石油(集团)有限责任公在提高采收率技术研究、油藏数值模拟、地质建模、地震综合反演、测井综合评价等方面具有良好的基础条件。国内参与单位拥有的条件和经验，为完成本研究内容奠定了良好基础。

The team has strong research and development ability on CCS, including the well known experts in China. The specialty covers chemical engineering, thermal energy engineering, physical geography , rock mechanics, coal and oil or gas geology, oil development and system analysis. Partners have advanced test and measurement system, and a CCS pilot project is being implemented now .

通过神华 CCS 示范项目的合作，中科院武汉岩土所、清华大学、中国矿业大学已和神华集团建立了良好的合作关系。在 EOR 方面，陕西能源化工研究院、延长集团等已展开进行了密切合作。已有的合作基础为完成本研究任务提供了保障。美方对口单位中，通过和神华集团等单位的合作，西弗吉尼亚大学已初步建立了地层评价方法和技术、静态地质模型、安全和风险性评估技术。劳伦斯利弗莫尔实验室已建立的 CO_2 封存模拟软件、地球化学作用评估软件。怀俄明地质调查局和怀俄明大学在地质封存领域拥有较强的软硬件条件，并通过和陕西能源化工研究院的合作，在封存潜力评估等方面取得了初步成果。通过中美双方的前期合作，本课题组已具备完成课题任务的条件。

Through the CCS demo project in progress, RISM, Tsinghua U., CUMT have established nice cooperative relations. Also, ISECE and Yanchang Petroleum are carrying on intimate cooperation in EOR. WVU has preliminarily built the stratum evaluation methodology, constructed the static geological model and mastered the risk evaluation method. LLNL has developed the CO_2 geological storage related simulation codes. WSGS and UW possess powerful research and developing conditions and has bear some preliminary fruits in storage capacity evaluation through the cooperation with ISECE .

2009 年，神华和 WVU 在中美清洁能源合作协议附件 II 的框架下签署了第二个《神华和西弗吉尼亚大学 CCS 研究合作备忘录议》。

In 2009, West Virginia University and China Shenhua Coal to Liquid and Chemical Co. Ltd signed the No. 2 MOU about CCS research, under the MOU between DOE and SEA-NDRC(Fossil Energy Annex Ⅱ).

2009 年，陕西省能源化工研究院与美国怀俄明州地质调查局签署了《联合开展二氧化碳地质封存及综合利用合作协议》。

In 2009, Shaanxi Institute of Energy Resource &Chemical Engineering and WSGS signed the agreement about CO_2 geological storage and utilization. .

14. 预计成果

Output and deliverables

(1) CO_2 咸水层封存的运移机理

Storage theory of migration of supercritical carbon dioxide in reservoir rocks

- 通过岩心尺度驱替实验、孔隙尺度数值模拟等方法，研究 CO_2 地质封存机理，增加对封存的影响机理的认识。

  To develop fundamental understanding and quantitative description of the behaviours of CO_2 migration at extreme conditions relevant to saline aquifers encountered in carbon sequestration.

(2) CCS 封存潜力和适用性评价方法和技术

Method and technology of CCS potential evaluation and suitable block selection.

- 针对选择的研究区，形成 EOR、ECBM、咸水层封存潜力的评价方法。分别计算封存潜力并形成编图。研究 CCS 场地适宜性的定义和评价方法，形成适宜性评价分区编图。

  Research the potential evaluation method and predict storage capacity of EOR, ECBM and saline reservoir. Define the CCS site adaptable block and research the evaluation method. Put forward the technology of adaptable block selection in the research regions.

(3) 研究区封存潜力和区块优选

Capacity evaluation and suitable area selection of CO_2 geological storage in research regions.

- 针对研究区，根据研究成果和建立的评价方法，对研究区内的煤层、油田和咸水层的封存潜力进行综合分析，并提出 CO_2-EOR 技术的可行性和技术方案。结合研究区 CO_2 排放源的分布特征，优选出适宜性区块并绘制地图。

  Predict the storage capacity and optimize block in research regions. Put forward the CO_2-EOR feasibility and technical proposal. Combined with the CO_2 emission resource distribution in research regions, draw the adaptable block map.

任务 7：二氧化碳资源化利用 - 微藻固碳和生物能源

Task7: Carbon Dioxide Utilization with Microalgae

任务摘要

Summary (200~300 words)

新奥微藻生物固碳与生物能源技术是中国在探索二氧化碳资源化利用领域中的典型代表，其在科技部、发改委和能源局的支持下，已经形成了较完整的研发与技术体系和一定的产业化基础。新奥还与杜克能源进行了利用微藻直接吸收电厂烟气中二氧化碳的合作研究。在此基础上，本课题将探索一条可持续的且具有经济可行性的利用微藻固定二氧化碳并生产可再生能源的途径。主要内容包括：通过高通量筛选、诱变和基因工程改造等手段，获得可与烟气相更匹配、固碳能力更强且含油量更高的优质藻株；开发低成本、高效光生物反应器；研发大规模、高密度微藻养殖工艺和高效、低能耗收集技术；研究经济的生物燃料炼制和多联产后处理技术；建立完善的“微藻-二氧化碳资源化利用”中试示范，分析其技术经济性，探寻规模与成本间的对应关系，进一步研究微藻生物固碳技术对环境的影响力。

This project will explore an economically viable pathway to fix carbon dioxide from coal-based power plants or coal chemical plants using microalgae and transform the algal biomass into a sustainable source of renewable energy. Based on the joint field test results at Duke Energy’s East Bend power plant, carried out by the ENN-Duke team, different methods and technologies will be developed, including high-throughput screening technique, mutagenesis and genetic approaches, high-efficiency and low-cost industrial photobioreactors, large-scale cultivation technology, algae harvesting technology, and the related post-processing technologies for co-products. An integrated approach for process scale-up of for CO2 utilization via microalgae will be established and a techno-economic analysis of this approach will be carried out to estimate the overall cost at various scales of operation. The environmental impact of microalgae bio-sequestration will be studied.

1. 任务背景

Introduction

能源危机和温室效应正威胁着全球安全。能源问题一直以来是影响中美两国发展的重要问题，而二氧化碳排放是导致全球变暖的重要原因。中美两国面对共同的挑战，迫切需要协同合作以寻找一种可同时解决二氧化碳排放和能源问题的可持续发展途径。

Energy crisis and global warming are threatening the global security. Energy is, and will continue to be, one of the most important issues for the development of both China and the U.S. Carbon dioxide emissions are one of the most important causes of global warming. Common challenge requires collaborative response from both China and the U.S. There is an urgent need to find a sustainable pathway to curb CO2 emissions and resolve energy issues simultaneously from the perspective of both China and the U.S.

当今世界的可持续发展面临着诸多挑战，微藻生物燃料具有解决这些挑战的巨大潜力。微藻是一类个体微小的单细胞光合微生物，具有生长速度快、对土地要求低（不与农争地）、含油量高（亩产油量是大豆的 90 倍，数据基于新奥在国家科技部、能源局和发改委的支持下所建内蒙古达拉特旗产业化示范基地现场试验数值）、吸碳能力强（约为林木的 5-8 倍，数据基于产业化示范工程试验数据），产品组合广泛等优势。新奥-杜克团队在杜克能源公司的 East Bend 电厂完成了现场对接实验，验证了利用燃煤电厂烟气直接进行微藻养殖的可行性。

Biofuels made from microalgae hold the potential to solve many of the sustainability challenges facing the world today. Microalgae are single-cell, photosynthetic organisms known for their high growth rate, low land requirement (non-competitive with agriculture), impressive high oil productivity (90 times more oil per acre than that of soybean, based on the data from ENN's industrial demonstration project in Inner Mongolia supported by Chinese government agencies - MOST, NEA, and NDRC), and high carbon mitigation capability (5~8 times more than that of equivalent forest biomass energy content, based on the data from ENN's industrial demonstration project), and broad product portfolio. It has been proved by the results from the joint-field test at Duke Energy's East Bend power plant, carried out by the ENN-Duke team, that microalgae can absorb carbon dioxide directly from the flue gas of a coal-fired power plant.

然而，通过微藻实现二氧化碳的资源化利用也面临着高资本投入和高商业化运行成本等严峻挑战。该项目将完成电厂烟气直接利用、规模化养殖、多联产产品生产过程工艺优化等诸多方面研究，并对技术经济性和环境影响进行分析。中美两国学者的共同努力将促进"利用微藻的二氧化碳资源化利用"技术成果向产业化应用转化，加速其商业应用和推广，实现化石能源的清洁利用，从而缓解人类当前所面临的能源和气候问题。

However, carbon dioxide utilization with microalgae has also faced many critical challenges, including high capital investment and high operating costs for commercialization. The joint project will address the optimized process of utilizing power plant flue gas, large scale cultivation process, the production of multiple products, and the analysis of the potential techno-economic and environmental impacts. This combined effort by researchers from both China and the U.S. will accelerate the transformation of scientific and technological achievements into industrial applications and the industrialization process of CO2 utilization with microalgae, and finally promote its commercial applications and extension to achieve the goal of clean use of fossil energy, which, in return, alleviates the above-mentioned energy and climate challenges we face today.

2. 任务目标

Objectives

该联合研究项目将开发并示范一条通过微藻固定二氧化碳并生产可持续能源的经济途径。具体目标如下：

The objective of the joint project is to develop and demonstrate an economically feasible technology and pathway of carbon dioxide utilization with microalgae and transform the algal biomass into a sustainable source of energy. The specific objectives of this joint opportunity are as follows：

（1）通过诱变育种和基因工程法，分离并改良微藻藻株，获得与特定区域条件最为匹配的固碳潜力藻株；

Screen and select the promising microalgae strains best suited for specific locations and

improve the strains by mutagenesis and genetic approaches

（2）开发微藻培养系统并优化规模化养殖工艺参数

Develop the algal cultivation system and optimize the process variables

（3）开发高效、低成本后处理技术

Develop high efficient and cost-effective post-processing technologies

（4）分析微藻生物固碳工艺的技术经济性，并研究微藻生物燃料及其副产品对环境的影响。

Analyze the techno-economics of carbon dioxide utilization process with microalgae and the environmental impacts of microalgae-based biofuels and co-products.

3. 任务研究内容

Statement of Work (SOW)

开发、利用高通量筛选技术，鉴别并筛选高效固碳潜力藻株；通过诱变和基因工程改造等手段，更进一步提高所筛当地潜力藻株的生长能力、重要代谢产物产量和藻株抗逆性；通过优化光生物反应器结构、养殖和收集工艺、油脂提取和精制技术，确定适宜的微藻规模化光合自养养殖系统培养和生物柴油生产工艺。开发出利用微藻进行二氧化碳资源化利用的完整工艺包；最后，对微藻固碳技术的经济性以及燃料和其它副产品对环境的影响进行分析。该项目分为四个子任务：

High-throughput screening techniques will be explored to identify and select promising specimens for cultivation and strain development. The selected native algae strains will be further improved by mutagenesis and genetic approaches for optimal growth physiology, metabolite production, and strain robustness. Optimal photoautotrophic cultivation and biodiesel production system will be identified by optimizing photobioreactor, cultivation process, algae harvesting, oil extraction and refining technologies. A complete process package of carbon dioxide utilization with microalgae will be developed. Finally, the techno-economics of carbon dioxide utilization process with microalgae and the environmental impacts of microalgae-based biofuels and co-products will be analyzed. The project is divided into four subprojects：

（1） 筛选与特定区域最为匹配的潜力藻株，利用诱变及基因工程改造等手段提高藻株性能，并研究二氧化碳固定和三羧酸甘油酯的合成机理。

Screen the promising microalgae strains best-suited for specific locations, improve the strains by mutagenesis and genetic approaches, and study the CO2 fixation and triacylglycerol production mechanism

- 利用高通量筛选技术从 ENN 和合作伙伴藻种库中筛选与当地气候、烟气和废水最为匹配的潜力藻株。

  Besed on local climate and local availability of flue gas and wastewater, screen and select the most promising algae strains from ENN and partners' strain banks and other partners using high-throughput screening techniques

- 利用化学或物理诱变（如，UV 和钴-60γ 射线）方法或基因工程改造等手段对所筛最佳匹配藻株进行改良，以提高藻株的生长能力、重要代谢产物的产量和藻株的抗逆性。

  Improve the selected best-suited algae strains by chemical or physical (such as UV and Co-60 gamma irradiation) mutagenesis or genetic approaches to optimize their growth physiology, metabolite production, and strain robustness

- 研究含油微藻的光合作用和二氧化碳固定机制。

Investigate photosynthetic physiological characteristics and CO2 fixation mechanism of oleaginous microalgae

- ◆ 研究含油微藻中三羧酸甘油酯的合成途径和代谢调控机理。

  Investigate the pathway of biosynthesis and metabolic regulation of triacylglycerol production in oleaginous microalgae

（2） 开发微藻规模化养殖系统，优化其过程参数

Develop the algal cultivation system and optimize the process variables

- ◆ 设计开放式、封闭式反应器或其组合体系，以获得产量高，成本低的大规模微藻养殖光生物反应器及其系统。

  Design open pond, closed photobioreactors, or a hybrid combination to obtain optimal growth physiology and metabolite production and reduce capital and labor costs

- ◆ 开发能充分利用藻种生物学特性、并能与该藻种最适的后处理工艺相整合的培养系统，以进一步提高产量、降低成本。

  Develop an optimum cultivation system leveraging the biology of the algal strain used and integrating it with the best-suited downstream processing options to further increase the productivity and reduce capital costs

- ◆ 开发自动化或半自动化监测系统，以进一步降低操作成本。

  Develop methods for rapid, automated or semi-automated biological and chemical monitoring in production settings to lower the operating cost

- ◆ 与合作单位联合建造中式示范基地，应用最为匹配的藻种，优化工艺参数，进行技术经济性分析，并形成微藻固碳工艺包。

  Working with partners to build a pilot-scale demonstration plant using the best-suited microalgae strains, optimize the process variables, perform techno-economic analysis of the process at pilot-scale plant, develop a process package for process scale-up

（3） 开发高效、低成本后处理技术

Develop high efficient and cost-effective post-processing technologies

- ◆ 研究微藻收集方法，开发出一种适于所筛藻株的低能耗并具有成本优势的收集、脱水方法。

  Investigate multiple harvesting approaches and identify and develop a cost-competitive harvesting and dewatering technology with minimal process energy intensity

- ◆ 研究油脂提取方法，开发出一种适合于所筛藻株的高效低成本油脂提取技术。

  Investigate multiple extraction approaches and identify and develop an efficient and effective extraction technology suited for the selected algal species and growth status

- ◆ 研究脱水、收集过程所排清液（含有营养物）循环利用工艺的可行性，并开发微藻敌害防治技术。

  Investigate the feasibility of recycling nutrients and water derived from dewatering and harvesting and develop appropriate technologies to maintain microalgal heath

- ◆ 开发生物柴油和航空煤油生产技术。

  Develop biodiesel and jet fuel production technologies

- ◆ 考察利用微藻各组分生产其它高价值副产品的行性，以提高工艺经济性。
  Examine the possibility of biorefinery for utilization of every component of the algal biomass raw material to produce other high-value co-products to enhance the economics of the process

（4） 分析利用微藻固碳并生产生物能源的技术经济性，研究微藻生物能源及其副产品对环境的影响

Analyze the techno-economics of carbon dioxide utilization process with microalgae and the environmental impacts of microalgae-based biofuels and co-products

- ◆ 分析工艺放大过程中的技术经济性挑战。
  Study the techno-economic challenges associated with scaling up of processes
- ◆ 研究微藻固碳、微藻生物能源及其副产品对环境的影响。
  Analyze the environmental impacts of microalgae and microalgae-based biofuels and co-products

4. 任务组织

Project Organization

中方单位包括新奥集团、浙江大学和暨南大学。项目组织架构如表 1 所示：

The Chinese team includes ENN, Zhejiang University and Jinan University. The project organization structure is shown in Table 1：

（1） 朱振旗博士领导微藻-CO2 资源化利用项目，全面负责监管项目事务。
Dr. Zhenqi Zhu will lead the project of CO2 Utilization with Microalgae and will oversee the associated activities

（2） 吴洪博士作为新奥集团技术负责人，负责相关事务。
At ENN, Dr. Hong Wu will act as the technical leader and will be responsible for the associated activities

（3） 程军博士作为浙江大学技术负责人，负责相关事务。
At Zhejiang University, Dr. Jun Cheng will act as the technical leader and will be responsible for the associated activities

（4） 张成武博士作为暨南大学技术负责人，负责相关事务。
At JinanUniversity, Dr. Chengwu Zhang will act as the technical leader and will be responsible for the associated activities

（5） 新奥与浙江大学、暨南大学联合，确保研究计划的执行。
ENN will interact with Zhejiang University and Jinan University to ensure the implementation of the research plans

此外，新奥将凭借他们的技术和经验与杜克能源公司一起，建立微藻-二氧化碳资源化利用中试示范。新奥集团还将在与杜克能源和 NETL 已建立的合作基础上，确保相关数据和专利的共享，以及中美两国的成功合作。

In addition, ENN will leverage their expertise and experiences to work with Duke Energy to demonstrate the carbon dioxide utilization with microalgae in a pilot-scale plant. ENN will also leverage the existing relationships with Duke Energy and NETL to ensure alignment of data sharing and IP concerns and a successful collaboration between China and the U.S.

表 1. 项目团队组织 (中方)

微藻-CO2 资源化利用		项目负责人：朱振旗		
子任务	研究方向	新奥	浙江大学	暨南大学
子任务 1	a	吴洪⊗		张成武×
	b	吴洪⊗	程军×	张成武×
	c			张成武⊗
	d			张成武⊗
子任务 2	a	吴洪⊗	程军×	张成武×
	b	吴洪⊗		
	c	吴洪⊗		
	d	吴洪⊗		
子任务 3	a	吴洪⊗		张成武×
	b	吴洪⊗		
	c	吴洪⊗		
	d	吴洪⊗	程军×	张成武×
	e	吴洪⊗		
子任务 4	a	吴洪⊗		
	b	吴洪⊗		

注：⊗子任务负责　×子任务参加

5. 任务研究计划（包括年度计划）

Project Schedule

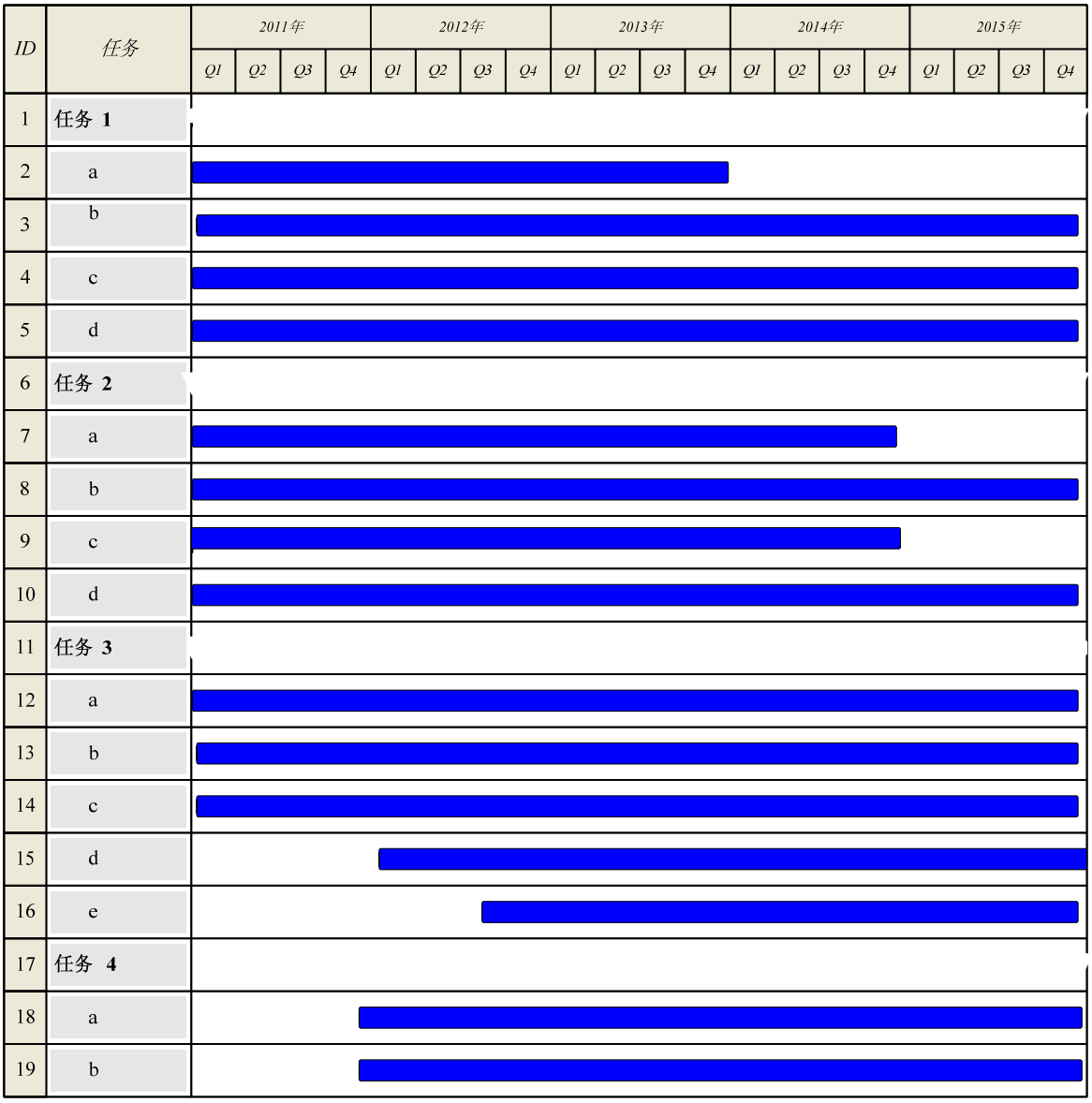

6. 合作基础与合作能力

Personnel, Facility and Equipment

新奥从 2007 年开始探索利用微藻固定二氧化碳的可持续发展途径，致力于将微藻这一最有前途的可再生能源来源，转化为石油的真正竞争者。微藻技术的独特之处在于它在不破坏环境或食物供给的前提下，从根本上改变我们的能源来源。目前，该公司开发的微藻生物能源技术的成熟度和价值经国际知名技术调研公司 Lux Research 评定，均已达到国际领先水平。新奥已与美国国家能源技术实验室（NETL）、美国国家可再生能源实验室（NREL）、美国马里兰大学（UMCES）和美国亚利桑那州立大学（ASU）等全球知名研究院所、高校及企业建立了双赢且稳固的合作关系，以进一步提高其创新和产业化能力。与杜克能源（Duke Energy）的联合研究已启动，一期实验证实了直接利用燃煤电厂废气进行微藻养殖

的可行性。新奥提供的人力、设备、仪器包括但不限于：

ENN has initiated a research and development program in 2007 to explore a sustainable pathway to fix carbon dioxide with microalgae and transform algae, one of the most promising sources of renewable energy, into a true competitor to petroleum. Our unique algae-based technology is targeted at fundamentally changing our source of energy without disrupting the environment or food supplies. Today, the technology maturity and its value of our microalgae technology have reached the international advanced level according to the Algae Technology Assessment Standard developed by Lux Research. ENN has built up substantial win-win collaborative relationship with well-known research institutes, universities and industrial partners around the globe to enhance its innovative and industrialization capabilities, which include National Energy Technology Laboratory (NETL), National Renewable Energy Laboratory (NREL), The University of Maryland Center for Environmental Science (UMCES) and Arizona State University (ASU). A joint research with Duke Energy Corporation has been initiated, and the first-stage experiment has showed the feasibility of direct use of flue gas from coal-fired power plant for microalgae CO2 fixation. The personnel, facility and equipment at ENN will include, but not be limited to:

（1）由该领域核心专家领导的 70 余名科学家和工程师团队。

More than 70 scientists and engineers led by core experts in their fields.

（2）用于开展工艺放大的公顷级中试研发基地和在中国科技部、能源局及发改委的支持和帮助下建造的中国第一个微藻生物能源产业化示范基地。

A pilot-scale R&D plant at the hectare level built up for process scale-up development and the first microalgae bioenergy industrial demo plant in China, which is under construction with the support of The Ministry of Science and Technology of P.R.C, National Development and Reform Commission, and National Energy Administration.

（3）2010 年 1 月经中国科技部批准筹建的新奥煤基低碳能源国家重点实验室（建筑面积为 22899 m2）；和该实验室内用于开发微藻生物燃料和生物产品的世界一流的仪器设备。

Facilities at The State Key Laboratory of Coal-based Low Carbon Energy (CLCE) of ENN GROUP, which was approved by Ministry of Science and Technology of the P. R. China in Jan. 2010. With the building area of more than 22899 m2, CLCE is equipped with world-class facilities to provide and develop solutions for the challenges of mirocalgae-derived biofuels and bioproducts.

浙江大学“清洁能源利用”国家重点实验室拥有先进的仪器设备，暨南大学在微藻领域拥有丰富的研究经验和专业技能，这两所高校均将提供必要的设备和人力以确保任务的顺利完成。

Zhejiang University will leverage their advanced facilities at State Key Lab of Clean Energy Utilization and Jinan University will leverage their extensive research experience and expertise in micoalgae. Both Zhejiang University and Jinan University will provide all necessary equipment and labor for the completion of their project tasks.

7. 预计成果

Deliverable/ Output

（1） 第一年度工作进展报告（2011 年 12 月 31 日）；

Year-end progress report on year 1 activities (December 31, 2011)

（2） 第二年度详细工作计划（2011 年 12 月 31 日）；
Detailed work plan for year 2 (December 31, 2011)

（3） 第二年度中期进展报告（2012 年 12 月 31 日）；
Interim progress report on year 2 activities (December 31, 2012)

（4） 第三年度详细工作计划（2012 年 12 月 31 日）；
Detailed work plan for year 3 (December 31, 2012)

（5） 第三年度中期进展报告（2013 年 12 月 31 日）；
Interim progress report on year 3 activities (December 31, 2013)

（6） 第四年度详细工作计划（2013 年 12 月 31 日）；
Detailed work plan for year 4 (December 31, 2013)

（7） 第四年度中期进展报告（2014 年 12 月 31 日）；
Interim progress report on year 4 activities (December 31, 2014)

（8） 中美清洁能源联合研究中心结题报告（2014 年 12 月 31 日）。
Completion report to CERC (December 31, 2014)

8. 联系信息

Contact information

单位	姓名	电话	电子邮箱
新奥集团	朱振旗	86-316-259-6955(办公电话) 86-150-7662-7605(手机)	zhuzhenqi@enn.cn
	吴洪	86-316-259-5821(办公电话) 86-150-7562-4205(手机)	wuhong@enn.cn
	刘敏胜	86-316-259-5819(办公电话) 86-158-3060-3192(手机)	liuminsheng@enn.cn
	徐春保	86-316-259-6979(办公电话) 86-186-3261-2255(手机)	xucb@hotmail.com xuchunbao@enn.cn
	王琳	86-316-259-6980(办公电话) 86-139-3065-2558(手机)	wanglinh@enn.cn
暨南大学	张成武	86-134-3028-7280(手机)	tzhangcw@jnu.edu.cn
浙江大学	程军	86-571-8795-2889(办公电话)	juncheng@zju.edu.cn
Duke Energy	River Lu	1-704-743-6781 (手机) 86-139-1090-5826(手机)	river.Lu@duke-energy.com
	Doug Durst		doug.durst@duke-energy.com
	Zak Kuznar		Zachary.kuznar@duke-energy.com
University of Kentucky	Donald. J. Challman	1-859-257-0305(办公电话) 1-859-221-0211(C)	challman@caer.uky.edu
	Mark Crocker		crocker@caer.uky.edu

NETL	Dirk Link	1-412-386-5765	dirk.link@netl.doe.gov
PNNL	Jud Virden	1-509-375-6512 1-509-521-5998	jud.virden@pnl.gov

Team	Name	Tel #	Email
ENN	Zhenqi Zhu	86-316-259-6955(O) 86-150-7562-7605(C)	zhuzhenqi@enn.cn
	Hong Wu	86-316-259-5821(O) 86-150-7562-4205(C)	wuhong@enn.cn
	Minsheng Liu	86-316-259-5819(O) 86-158-3060-3192(C)	liuminsheng@enn.cn
	Chunbao Xu	86-316-259-6979(O) 86-186-3261-2255(C)	xucb@hotmail.com xuchunbao@enn.cn
	Lin Wang	86-316-259-6980(O) 86-139-3065-2558(C)	wanglinh@enn.cn
Jinan University	Chengwu Zhang	86-134-3028-7280(C)	tzhangcw@jnu.edu.cn
Zhejiang University	Jun Cheng	86-571-8795-2889(O)	juncheng@zju.edu.cn
Duke Energy	River Lu	1-704-743-6781 (C) 86-139-1090-5826(C)	river.Lu@duke-energy.com
	Doug Durst		doug.durst@duke-energy.com
	Zak Kuznar		Zachary.kuznar@duke-energy.com
University of Kentucky	Donald. J. Challman	1-859-257-0305(O) 1-859-221-0211(C)	challman@caer.uky.edu
	Mark Crocker		crocker@caer.uky.edu
NETL	Dirk Link	1-412-386-5765	dirk.link@netl.doe.gov
PNNL	Jud Virden	1-509-375-6512 1-509-521-5998	jud.virden@pnl.gov

任务 8：系统集成、模拟和评估

Task8: Systems Integration, Simulation and Assessment

任务摘要

Summary (200~300 words)

系统集成课题旨在研究 CCS 的各项单元技术组合成的系统的安全、经济运行问题以及项目建设、运行和退役需要遵守的法律法规问题。课题任务设置的思路是：沿 CCS 技术链和 CCS 项目实施的全生命周期时间链两条线索，辨识中国未来可能大规模应用 CCS 的情况下需要建立的系统设计、评价、运行的技术能力以及项目实施需要建立的法律法规事宜，并据此设立研究子课题。目前，设立的子课题包括：1）带 CO_2 捕集的燃煤电站建模与仿真研究；2）基于管道腐蚀速率实验的二氧化碳杂质含量推荐标准；3）二氧化碳埋存地址封闭后管理方法研究；4）全脱碳燃煤发电系统（包括燃烧前和燃烧后）的设计和静态建模；5）典型煤化工过程二氧化碳排放全生命周期分析研究；6）基于 IGCC 的 CO_2 捕获系统模拟研究；7）富氧燃烧碳捕获与埋存系统的综合分析；8）带 CO_2 捕集的 IGCC 发展潜力研究—新一代带 CO_2 捕集的 IGCC 系统的优化集成研究； 9）蒸汽动力系统优化。

The project of systems integration aims to study the issue of secure and economical operation of a CCS system, which consists of many different units, and legal and regulatory issues appearing during its construction, operation, and decommission stages. The research direction will be to follow the technical chain and life-cycle assessment (LCA) based temporal chain of a CCS project, and develop the capability of system design, assessment and operation in a future scenario where large-scale CCS is to be implemented. According to this target, nine research tasks have been set up, as follows: 1) Modelling and simulation of coal-fired power plants with CO_2 capture; 2) CO_2 property and corrosion study for CCS chain optimization; 3) Post-sequestration management structure study; 4) Design and static simulation of coal-fired power plant with total carbon capture, including pre- combustion and post- combustion; 5) Life-cycle analysis on CO_2 emissions of typical coal to chemical projects; 6) Simulation of IGCC based CO_2 capture systems; 7) Integrated analysis of carbon capture and sequestration in an oxygen-rich combustion system; 8) Potential of IGCC development in China - Integration study of new IGCC concept; 9) Optimization of steam power systems.

1. 任务背景

Introduction

CCS 系统是一个由捕捉、输送和埋存等环节组成的整体技术系统，其各个环节之间紧密相连，互相影响，因此系统性能并不是各环节性能的简单叠加，需要建立系统层面上的设计、评价、优化和运行技术能力。此外需要建立一系列的法律、法规、标准，以保障 CCS 系统的安全运行和二氧化碳的安全有效埋存，这也是本课题需要辨识和研究的内容。

CCS is an integrated system consisting of capture, transportation and storage sections. These sections are linked together closely and influenced by each other. The relation among these sections is even more complicated since there are different technology options for each section,

such as post and pre combustion carbon capture for the capture section. Meanwhile, the implementation of CCS will impact largely to the energy system. Therefore, to ensure its economical, safe, and effective deployment, a set of system integration technologies should be developed which covers the aspects as system design and optimization, performance assessment, and pre- and post-closure management. Furthermore, to access the impact of its implementation to the carbon reduction and provide boundary and constrains for different technology options from system aspect are also very necessary and complementary to technology study itself.

2. 任务目标

Objectives

本研究的第一阶段目标是建立 CCS 系统整体设计、评价、优化、性能预测和动态仿真的技术能力以及埋存地址封闭后管理的方法建议。

The research objectives of this project in its first phase is to establish the technical capability of system design, assessment, optimization, performance prediction, and dynamic simulation and to provide proposals for means of post-closure management of sequestration sites.

3. 任务研究内容

Statement of Work (SOW)

（1） 带 CO_2 捕集的燃煤电站建模与仿真研究：

Modeling and simulation of coal-fired power plants with CO_2 capture：

- ◆ 设计全尺寸的燃烧后 CO_2 捕集燃煤火电站的系统流程和参数，进行静态流程模拟

  Design the process and working conditions of full scale post-combustion CO_2 capture power plant and establish flow sheet model；
- ◆ 建立二氧化碳捕捉设备和系统的动态数学模型，为进一步开发动态仿真装置奠定基础

  Develop dynamic models of unit operations of CO_2 capture system to be prepared for further development of dynamic simulator of power plant with carbon capture；

（2） 基于管道腐蚀速率实验的二氧化碳杂质含量推荐标准：

Impurity limit recommendations based on pipeline corrosion experiments：

- ◆ 研究在各种不同的杂质气体含量下，管道的腐蚀速率

  Identify the corrosion rates of pipeline at various gas compositions via corrosion experiments；
- ◆ 建议满足管道安全运行要求的二氧化碳杂质含量标准

  Propose limits of impurities for ensuring pipeline safety；

（3） 二氧化碳埋存地址封闭后管理方法研究：

Post-sequestration management：

- ◆ 封闭后需移交的内容及其移交方式分析

  Analysis of the items to be transferred and their transfer modes after site-closure；
- ◆ 移交内容后续运营管理模式探析

  Study on a practical management framework in the post-closure regime；

（4） 全脱碳燃煤发电系统（包括燃烧前和燃烧后）的设计和静态建模：

Design and static simulation of coal-fired power plant with total carbon capture,

including pre- combustion and post- combustion：

- ◆ 研究全脱碳燃煤电站（燃烧后捕集）的工艺方案设计和系统静态模型
  System scheme design and system static model Research on the system scheme design and system static model of thermal power plant with total carbon capture；
- ◆ 全容量脱碳 IGCC+CCS 系统的静态模拟（全系统）
  The system static simulation of IGCC with total carbon capture；

（5） 典型煤化工过程二氧化碳排放全生命周期分析研究：

Life-cycle analysis on CO_2 emissions of typical coal to chemical projects：

- ◆ 煤炭供应和转化全链数据搜集
  Data collection all through the coal supply and conversion chain；
- ◆ 建立适应新条件的全生命周期分析模型
  Setting up LCA model to adapt to new conditions；
- ◆ 对几种典型煤化工过程进行模型分析
  Evaluation the coal-chemical projects by modeling；

（6） 基于 IGCC 的 CO_2 捕获系统模拟研究：

Simulation of IGCC based CO_2 capture systems：

- ◆ 煤气耐硫变换技术流程模拟与优化
  Simulation and optimization of sulphur-tolerant water-gas shift technical processes；
- ◆ 脱硫脱碳工艺流程模拟与优化
  Simulation and optimization of sulphur and carbon removal processes；
- ◆ 煤气中温变换＋膜分离流程模拟与优化
  Simulation and optimization of water-gas shift at intermediate temperature and membrane separation processes；
- ◆ 基于 IGCC 的低能耗 CO_2 捕获系统流程模拟与优化
  Simulation and optimization of IGCC based low energy intensity CO_2 capture processes；
- ◆ 基于 IGCC 的 CO_2 捕获系统技术经济性研究
  Techno-economic study on IGCC based CO_2 capture systems；

（7） 富氧燃烧碳捕获与埋存系统的综合分析：

Assessment of oxy-fuel combustion system and its deployment potential：

- ◆ 湖北省 CO_2 捕获-埋存-利用潜力调查
  Survey on the potential of CO_2 capture, sequestration, and utilization in Hubei province；
- ◆ 富氧燃烧碳捕获过程模拟、集成和评价
  Simulation, integration, and assessment of carbon capture in an oxygen-rich combustion system；
- ◆ 燃煤发电部门发展 CCS 技术路线的整合评价
  Integrated assessment of CCS technology roadmap for pulverized coal power plants；

（8） 带 CO_2 捕集的 IGCC 发展潜力研究—新一代带 CO_2 捕集的 IGCC 系统的优化集成研究：

Potential study of IGCC with CO_2 Capture—optimization and integration of new generation IGCC with CO_2 Capture：

- ◆ 先进气化（内在碳捕集气化、先进给料、炉内脱硫等）、中温脱硫除尘净化、膜分离（空分和氢分离）、新一代氢燃气轮机及先进动力循环、吸收体吸收和吸收增强型变化等新型 CO_2 捕集、高温固体氧化物燃料电池、先进化工合成等 IGCC 关键过程和单元建模

  Modeling of advanced technologies, including advanced gasification technology (carbon capture ready gasification, advanced feeding technology and furnace desulfurization etc.), medium temperature purification technology, N_2/O_2 and H_2/CO_2 membrane separation technologies, new generation hydrogen gas turbine and advanced power cycle, novel CO_2 capture technologies based on solid absorption or absorption-enhanced shift, SOFC and advanced chemical synthesis technology and so on；
- ◆ 由创新型单元技术组成的 IGCC 的优化集成研究。研究新一代 IGCC 的优化系统方案、关键参数、变工况和动态性能、可靠性和可用率等

  System optimization and integration of new generation IGCC with advanced component technologies. Study of optimal system configuration, integration optimization, key parameters identification, off-design and dynamic performance, reliability and availability and so on；
- ◆ 技术评价。考虑技术发展的不确定性，进行各先进技术的技术、节能、经济、环境排放性能；进行方案筛选和可行性研究

  Technology evaluation and assessment：Performance analysis of advanced technologies from viewpoint of technology, energy-saving, economic and emission under uncertainty，Screening and feasibility study of new generation IGCC systems；
- ◆ IGCC 技术前景分析及技术、政策建议。IGCC 发展潜力及各单项先进技术的贡献率分析；IGCC 单元及集成技术发展方向分析；发展 IGCC 的技术、政策建议

  IGCC technology prospects analysis and technical pathway, policy recommendations. Analyze the development potential of IGCC and the contribution rate of individual advanced technologies; Analyze the development direction of IGCC units and integration technology; Propose technical and policy suggestions for IGCC development；

（9） 蒸汽动力系统优化：

Optimization of steam power systems：

- ◆ 以系统能效提高、二氧化碳减排为目标，以污染物排放为约束，从系统工程的角度研究煤的清洁利用问题

  Study the clean utilization of coal from an systems engineering aspect, with objectives of efficiency increase and reduction of CO_2 emissions, and constraints of pollutants emissions；

4. 任务组织

Project Organization

	Tsinghua	Shenhua	CPECC	Huaneng	HUST	CAS	ENN
子任务	Z. Li⊗	X. Ren	Y. Sun	J. Cheng	Z. Liu	Y. Xiao	S. Li
WS1	⊗		×				

WS2	⊗						
WS3	⊗						
WS4			⊗				
WS5		⊗					
WS6			×	⊗			
WS7		×			⊗		
WS8						⊗	
WS9							⊗

注：⊗子任务负责　×子任务参加

5. 任务研究计划（包括年度计划）

Project Schedule

ID	任务名称	2011年				2012年				2013年				2014年			
		Q1	Q2	Q3	Q4	Q1	Q2	Q3	Q4	Q1	Q2	Q3	Q4	Q1	Q2	Q3	Q4
1	任务 1																
2	任务 2																
3	任务 3																
4	任务 4																
5	任务 5																
6	任务 6																
7	任务 7																
8	任务 8																
9	任务 9																

6. 合作基础与合作能力

Personnel, Facility and Equipment

依托各成员单位现有的仪器设备和实验台架，结合中美双方的合作需求展开合作研

Use the existing experimental equipment and facilities to cooperate with the US partners according to the research demand of both sides.

7. 合作内容

（1） 中美双方就 CCS 系统集成研究进行合作

Both sides will cooperate with each on systems integration study of CCS units

（2） 合作交流通过电子邮件、电话会议、举办学术报告、不定期互访等形式进行

Communication means includes email, tele-conference, face-to-face meeting, and seminars at various time periods.

（3） 双方的合作研究可以以合作发表论文的形式体现

Joint research and joint publications.

8. 潜在的合作内容：

美方希望在系统集成和模拟方面提出更多的研究内容，可能的方向有燃烧后捕集，富氧

燃烧，IGCC，及其他煤基系统。流程模拟方面可能会增加气化、燃烧、煤转化等流程

（1） The US wants to bring more to the table in simulation and systems integration

（2） Will likely include simulation of post-combustion capture, oxyfiring, IGCC, and other coal-based systems.

（3） Will also probably include some process model simualtion, including gasification, combustion, and coal conversion.

9. 预计成果：

Deliverable/ Output

（1） 针对多种 CCS 技术，建立系统设计，性能评估，动态模拟的技术能力
Technical capability for system design, performance assessment, dynamic simulation of various CCS technologies

（2） CCS 项目实施的步骤建议，尤其是封闭后管理方法
Procedures for CCS project implementation, especially post-closure management framework

（3） CCS 系统发展的潜力评估以及推动所需政策识别
Assessment of development potential of several CCS technologies and relevant promoting policy needs

（4） 基于管道腐蚀速率实验的 CO_2 混合物杂质含量标准推荐
Recommendation of the up-limit of impurity in CO_2 mixture based pipeline corrosion experiments

任务 9.1：国际交流与综合

Task9.1: Communications and Integration

任务摘要

Summary (200~300 words)

本任务的目标是为中美清洁能源联合研究中心—清洁煤技术联盟提供方便、有效的交流平台，其主要任务包括为两国的不同研究小组提供有效的信息和设施共享、人员交换的途径。本任务将建设一个能够促进合作成就最大化的交流网络；同时，综合和整理其他任务的研究成果、进程，从而为使得联合研究中心的有效运行和得到更多认可服务。具体来说，本任务包括：1）建立一个能够为信息和设施共享、人员交流提供高效服务的平台；2）对清洁煤技术联盟各个任务的进展、成就及现状进行整理和综合，并向政府和公众汇报。

The task, communication and integration, is designed to provide efficient and effective communication among the advanced coal technology consortium members in both countries. Ensure effective sharing of information and facilities. Facilitate personnel exchanges among the different teams of the two countries and the different tasks of the consortium. Establish a communication network inside the US-China consortium to maximize the achievements of the cooperation. This includes integration other technical tasks within each national team as well as international coordination. The primary goals of the task are three-fold: 1）Provide the consortium a platform with effective share of information and facility, and personnel exchange；2）Integrate collective progress and achievement among different tasks and update to the public and government.

1. 任务背景

Introduction

中美清洁能源联合研究中心—清洁煤技术联盟包含有中方16家单位和美方18家研究机构的参与（如下面列表）；同时，在清洁煤技术联盟框架下，分为不同的合作任务，如洁净煤发电技术，燃烧前、燃烧后碳捕碳，煤的转化技术，系统集成、模拟和评价等等。其多任务、多团队导致的复杂性使得建立一个专门的国际交流任务非常必要。本任务将致力于为联合研究中心清洁煤技术联盟的各个研究团队和任务提供高效的交流平台，并整理和综合中心每年的进展和成就，为联合研究中心的成功合作提供服务。同时，本任务还将致力于帮助联合研究中心取得公众和政府的关注和认可。

There are 16 Chinese teams and 18 US organizations within the Advanced Coal Technology Consortium (ACTC). These groups are listed in the text box below. In addition to cooperation among the different organizations within the ACTC, are also a number of cooperative research tasks. These include: clean coal technology，coal conversion technology， post-combustion capture, pre-combustion capture etc. The complexity naturally rising from the multi-partner and multitask research necessitate make it necessary to have efficient and effective communication among the teams and tasks to promote successful collaboration and integrate the research progress of different tasks of the consortium annually. Besides, a separate communication and integration

team can also help gain from the public and government for the consortium.

清洁煤技术联盟成员单位：

- 大学：
  - 美方：
    - **West Virginia University** (lead for US team)
    - University of Kentucky
    - University of Wyoming
  - 中方：
    - 华中科技大学
    - 清华大学
    - 浙江大学
    - 中国矿业大学
    - 上海交通大学
    - 哈尔滨工业大学
    - 西北大学
- 国家重点实验室：
  - 美方：
    - Lawrence Livermore National Laboratory
    - Los Alamos National Laboratory
    - National Energy Technology Laboratory
  - 中方：
    - 中国华能集团清洁能源技术研究院
    - 中国科学院能源动力研究中心
    - 中国科学院武汉岩土力学研究所
- 非政府组织：
    - U.S.-China Clean Energy Forum
    - World Resources Institute
- 能源公司：
  - 美方：
    - LP Amina
    - GE
    - Alstom
    - Duke Energy
    - American Electric Power
    - Great Point Energy
    - Ramgen
  - 中方：
    - 华能集团
    - 神华集团
    - 新奥集团
    - 中国电力投资集团公司
    - 中国电力工程顾问集团公司
    - 陕西延长石油（集团）有限责任公司

2. 任务目标

Objectives

（1）及时向公众和政府部门更新研究中心的最新进展与成就，为决策者提供改进合作方式和方法的建议

Update the progress and achievement of the consortium to government and public, providing decision makers with information on how to further improve the cooperation

（2）为联合研究中心信息、知识共享，人员交流提供一个有效的平台

Provide the consortium with a platform to effectively share of information (knowledge, data etc.), including a program for personnel exchange;

（3）对联盟的各个任务的研究成果、进展进行整理和综合

Integrate the and the collective research results from within each national team as well as the research work of the entire bilateral ACTC consortia;

3. 任务研究内容 (SOW)

Statement of Work(SOW)

（1） 信息共享问题研究

Information sharing

研究如何在合作中进行信息（数据、知识）共享，建立双方信息共享模式

Develop a plan for how to share information within the ACTC, including knowledge, data, etc; and establish an information (knowledge, data, etc.) sharingmodel

（2） 企业间合作方式及信息共享模式研究

Inter-enterprise cooperation

中美两国大型能源企业间联合研究、信息共享、技术输出及知识产权保护等特点的比对与研究。

Develop a plan for joint research, information sharing, technique export and cooperation between the large energy companies on the ACTC teams.

（3） 联盟双方的工作综合

Integration

- 清洁煤技术联盟中、英文网站建设及每季度更新，发布新闻、进展、成就等；
  Construct a bilingual website for the ACTC for sharing news, progress, and achievement advertising with decision-makers and other interested stakeholders. Ipdate the website at least quarterly.
- 双语季报制作，介绍 2011 年 1 月所签框架项目的进展情况；
  Develop and produce a bilateral and bilingual CERC newsletter quarterly which outlines the key outcomes under each research theme and within the projects highlighted in the joint work plan signed in January 2010.
- 综合联盟的成就、进展，编制年度报告；向项目负责人和决策者提供联盟最新进展信息、合作模式分析和改进建议。
  Integrate the achievement, progress, and produce an annual report for the decisionmakers with updated cooperation mode, research progress, and suggestions for future improvement.
- 实现合作过程中的优势互补和融合等。
  Provide mechanisms to realize mutual complement and mutual amalgamation, to leverage the collective results of the ACTC research for benefits of both countries.

（4） 交流

Communication

- ◆ 组织定期、不定期联席会议；
  Organize regular and ad-hoc bilateral meetings
- ◆ 组织本方不同团队定期、不定期会议；
  Organize regular and ad-hoc meeting within each national consortium
- ◆ 提供中美双方不同团队、任务间的无缝合作交流机制；
  Provide networking opportunities and platforms to enable smooth communication among the different China-US teams and different tasks. This may include site visits at relevant research centers in both countries.
- ◆ 提供双方人员交流机制；
  Provide a mechanism for personnel exchange

4. 任务组织

Project Organization

中方

单位	华中科技大学	华能清能院	清华大学
任务	邬田华 ⊗	李晨 ×	王哲 ×
信息共享	邬田华 ⊗	李晨 ×	王哲 ×
企业合作	邬田华 ×	李晨 ⊗	王哲 ×
综合	邬田华 ⊗	李晨 ×	王哲 ×
交流	邬田华 ×	李晨 ×	王哲 ⊗

注：⊗子任务负责 ×子任务参加

China

Institutions	HUST	CHNG-CERI	Tsinghua U.
Subtask	WU Tianhua ⊗	LI Chen ×	WANG Zhe ×
Share of information	WU Tianhua ⊗	LI Chen ×	WANG Zhe ×
Inter-enterprise cooperation	WU Tianhua ×	LI Chen ⊗	WANG Zhe ×
Integration	WU Tianhua ⊗	LI Chen ×	WANG Zhe ×
Communication	WU Tianhua ×	LI Chen ×	WANG Zhe ⊗

Note：⊗sub-task coordinate; × sub-task participant

美方

单位	WRI	WVU	CEF
任务			
信息共享	Sarah FORBES⊗	Qingyun SUN	Wei Hibbeln×
企业合作	Sarah FORBES	Qingyun SUN	Wei Hibbeln×
综合	Sarah FORBES⊗	Qingyun SUN×	Wei Hibbeln
交流	Sarah FORBES⊗	Qingyun SUN×	Wei Hibbeln

注：⊗子任务负责 ×子任务参加

US

Institutions	WRI	WVU	CEF
Subtask			
Information-sharing	Sarah FORBES⊗	Qingyun SUN	Wei Hibbeln×
Inter-enterprise cooperation	Sarah FORBES	Qingyun SUN	Wei Hibbeln×
Integration	Sarah FORBES⊗	Qingyun SUN×	Wei Hibbeln
Communication	Sarah FORBES⊗	Qingyun SUN×	Wei Hibbeln

Note：⊗sub-task coordinate; × sub-task participant

5. 任务研究计划（包括年度计划）

Project Schedule

ID	任务名称	2011 年				2012 年				2013 年				2014 年			
		Q1	Q2	Q3	Q4	Q1	Q2	Q3	Q4	Q1	Q2	Q3	Q4	Q1	Q2	Q3	Q4
1	信息共享																
2	企业合作																
3	综合																
4	交流																

（1） 合作中的信息共享问题研究

Implementation of information sharing

- 第 1 年:

  进行合作中的信息（数据、知识）共享调研

  Year 1:

  Survey of options for information sharing for bilateral cooperation;

  Develop and implement method of information sharing.

- 第 2-4 年:

  信息共享支持，建立信息共享模式

  Year 2-4:

  Support in information sharing.

（2） 企业间合作方式及信息共享模式研究

Inter-enterprise (or business-to-business) cooperation

- 第 1 年：

  两国企业间合作模式调研；

  能源企业信息共享研究；

  Year 1:

  Survey of options for inter-enterprise cooperationl;

  Research on information sharing between energy companies.

- 第 2-4 年：

  两国能源企业技术输出支持；

  两国能源企业间合作机会探索。

  Year 2-4:

  Support in knowledge sharing among energy companies participating in the US and China ACT teams;

  Explore opportunities for cooperation between energy companies.

（3） 联盟双方的工作综合

Integration

◆ 第 1 年：

中、英文网站建设；

季报和年报的制作；

分析双方各伙伴单位的合作优势。

Year 1:

Construction of the bilingual website for the CERC;

Production of the CERC newsletter quarterly and an annual outcomes report;

Analyze the opportunities for cooperation of each partner in the ACTC.

◆ 第 2~4 年：

中、英文网站维护；

季报和年报的制作；

为实现双方各伙伴单位在合作中的优势互补和相互融合提供支持。

Year 2-4:

Maintenance of the bilingual website for the CERC;

Production of the CERC newsletter quarterly and an annual outcomes report;

（4） 联盟双方的交流

Communication

◆ 第 1~4 年：

组织各种联席会议、双方对口合作伙伴的无缝对接和交流

Organization of various meetings, establishment of smooth communications between the partnersin the US and China.

6. 合作基础

Basis for cooperation and collaboration

（1） 合作理念

Coordinate Strategy

◆ 为双方合作提供全方位支持；

Ready to provide support for the cooperation in all aspects.

◆ 各子任务组织强大工作团队；

Strong working team for each sub-task.

◆ 努力使合作成果最大化；

Maximization of the achievements of cooperation.

◆ 在平等互利的基本原则下进行合作。

Cooperation under the basic principle of equality and mutual benefit.

（2） 项目主要参加人员列表

List of the main team members involved

单位	姓名	简要分工
华中科技大学	邬田华	中方负责人
	柳朝晖	参加
	张军营	参加

	赵永椿	参加
华能集团清洁能源技术研究院	李晨	参加
清华大学	王哲	参加
世界资源研究所	Sarah Forbes	美方负责人
	Logan West	参加
	Deborah Seligsohn	参加
	New Hire	参加
西弗吉尼亚大学	Qingyun Sun	参加
中美清洁能源论坛	Wei Hibbeln	参加

7. 预期成果

Deliverable/ Output

（1） 为上层决策提供支持、建议（如中美合作模式等）

Provide support and suggestions to the decision-maker about the model of cooperation between China and the US.

（2） 通过合作双方的充分沟通，建立双方可接受的信息共享模式

Establishment of an information (knowledge, data, etc.) sharing model in the cooperation acceptable to the ACTC partners from both countries based on thorough communication between them.

（3） 建立中、英文网站

Bilingual website of CERC.

（4） 制作 CERC 工作季报和年报

Production of CERC newsletter quarterly and an annual outcomes report.

（5） 成功组织多次各种双方联席会议

Organization of various bilateral meetings.

（6） 实现伙伴单位间的充分交流

Establishment of smooth communications and a program of personnel exchanges. .

任务 9.2：合作中的知识产权保护问题研究

Task 9.2： Research on the IP protection in the cooperation

1. 任务背景

Introduction (200~300 words)

知识产权的创造、运用、保护和管理，是所有研究开发活动、技术创新项目的一个不可缺少的重要组成内容。对于合作研究项目，尤其是跨国合作研究项目，知识产权问题显得更加复杂和重要，直接关系到合作研究能否正常持续开展。因此需要在项目合作的全过程中，配套进行有关知识产权分享、战略性管理和运用等的研究和协商。从而避免纠纷产生，鼓励信息共享，引导和激励合作研究。及时、有效、合理地规划研发成果的专利等知识产权保护。运用知识产权战略，引导合作研究向正确的方向开展、避免重复研究开发和无效的投入。

Creating, operation, protection and management of intellectual property (referred to as IP hereinafter) are important to almost all research and development activities and technology innovation projects. Intellectual property issues appear to be more complex and crucial for joint development projects, especial international joint development projects, which will decide whether the joint development can be operated smoothly. Therefore, during the whole process of cooperation, it is necessary to carry out research and negotiation on how to share intellectual property rights and strategic management and operation, in order to avoid disputes, to guide and inspire joint development, and to figure out IP protection strategy for arising IP timely, effectively and rationally. The usage of IP strategy can lead the joint development to the right direction and avoid research repetition and ineffective devotion.

通过双方提供、知识产权数据库检索相结合的方式，在项目合作开始前，就界定好中美双方、以及所有合作成员单位各自已经拥有的知识产权。协商签署知识产权协议，约定项目合作期间由双方合作完成的研究开发成果的知识产权归属及利用方式，以及一方对另一方在项目合作期间单独开发完成的技术成果的利用方式和条件，技术成果应用或许可使用收益的分享等等。

We can determine the background IP owned by both Chinese-American partners and other collaboration partners through providing by both parties and IP database searching. When signing intellectual property agreement, it is necessary to agree on the IP Management Protocol including the ownership and treatment method of arising IP, the method and condition to implement arising IP between parties, and the sharing ratio of future licensing profits.

2. 任务目标

Objectives

（1） 明晰在项目合作开始前中美双方以及所有成员单位的相关（现有）知识产权，避免日后的纠纷；

Determine the background IP owned by both American and Chinese partners and other collaboration partners before kicking off the project in order to avoid potential disputes.

（2） 签署知识产权协议，约定项目合作中知识产权的归属和利用办法，鼓励所有合作成员单位的数据等信息共享和保密协议；

Signing intellectual property agreement to define the ownership and implementation method, and encouraging all collaboration parties to share data and information.

（3） 运用知识产权战略，引导合作研究向正确的方向开展、避免重复研究开发和无效的投入；

Adopting intellectual property strategy to lead the joint development to the right direction and avoid research repetition and ineffective devotion.

（4） 及时合理地将合作研究开发项目的成果及时申请专利保护、登记软件著作权保护；将适于作为技术秘密保护的技术成果做好保密管理；

Patenting the research results of joint development project timely, effectively and

rationally, registering computer software copyright, and conducting confidential information management for Know-How.

（5） 积极规划，将系列研究成果在申请获得专利保护的前提下、并积极申请成为行业的技术标准。运用知识产权战略、将项目所产出的技术成果合理布局，积极申请行业技术标准并构筑专利网

3. 任务研究内容

Statement of Work (SOW)

（1） 界定项目合作开始前中美双方及各个成员单位的相关知识产权

Determining the background IP owned by both American and Chinese partners and other collaboration partners before kicking off the project in order to avoid potential disputes.

在双方各个成员单位主动申报的基础上，通过专利检索等方式，列出双方各个合作单位在合作前已经分别在相关领域拥有的专利、计算机软件著作权等知识产权。

To list the background IP owned by both partners before kicking off the project including patent、software copyright and so on through self-claiming and patent searching.

- ◆ 参考双方主动提出的专利权获专利申请清单，利用关键词、申请人、国际专利分类号等检索方式，检索中美双方及所有参与合作单位在国际范围内的专利获已经公开的专利申请。

  Carrying out key words searching, applicant searching and IPC code (international patent classification) searching on the published background IP owned by both American and Chinese partners in the world wide scope with regards to their background patent lists provided.

- ◆ 参考双方主动提出的著作权清单，检索相关著作权（版权）数据库，明晰中美双方及各个参加单位在相关领域已经拥有的软件著作权（版权）

  Carrying out software copyrights searching in relevant databases worldwide with regards to their background copyrights lists provided.

- ◆ 登记双方各参加单位提出的在相关领域已经拥有的技术秘密（或称为“保密技术”）

  Registering the technology know-how proposed by both parties in relevant area (or called “confidential information”).

（2） 协商签署知识产权协议，约定项目合作中知识产权的归属和利用办法，鼓励所有合作成员单位之间的数据和信息共享；

Signing intellectual property agreement to define the ownership and implementation method, and encouraging all collaboration parties to share data and information.

- ◆ 根据合作项目的总目标、需要和特点，起草知识产权协议，协调双方的知识产权协商和协议签署

  Drafting intellectual property agreement, coordinating negotiations and signing of agreement according to the overall goal, demands and characteristic of joint development projects.

- ◆ 根据双方各个成员单位知识产权的特点和技术秘密的情况，合理规划和选择相关文件作为《知识产权协议》的附件。

  Planning and selecting relevant documents as attachments of intellectual property agreement according to the characteristics of intellectual property right of all parties and status of technology know-how.

- ◆ 签署保密协议。

  Sign confidentiality agreements

（3） 合作项目实施全过程中的知识产权创造、运用、保护和管理的引导和规划

Guiding and planning the creating, operation, protection and management of intellectual property during the whole process of this collaboration project.

- ◆ 战略性地通过专利检索、产业发展分析等，引导合作研究向正确的方向开展、避免重复研究开发和无效的投入；

Leading the joint development to the right direction to avoid research repetition and ineffective devotion through patent searching and industrial development analyzing.

- 及时合理地将合作研究开发项目的成果及时申请专利保护、登记软件著作权保护；
  Patenting the research results of joint development project timely, effectively and rationally.
- 通过研究分析，引导各个合作成员或合作双方，将适于作为技术秘密保护的技术成果做好保密管理；
  Registering computer software copyright and conducting confidential information management for technology know-how based on search and analysis.
- 积极规划，将系列研究成果在申请获得专利保护的前提下、并积极申请成为行业的技术标准。
  Planning and applying for technology standard on condition that the research results have already been well patented.

4. 任务组织

Project Organization

该课题组将与美方知识产权子项目组合作，共同完成所有知识产权 3 个子任务的研究和规划。

We Chinese IP research group will cooperate with the U.S. intellectual property sub-project group and responsible for the research and planning of the three subtasks together.

	华中科技大学	清华大学
任务	余翔 ⊗ 13871403654	马军× 王兵×
子任务 1	冯仁涛 ×	×
子任务 2	刘珊× 卢娣×	×
子任务 3	罗立国× 邓洁×	

注：⊗子任务负责 ×子任务参加

5. 任务研究计划（包括年度计划）

Project Schedule

（1） 在中美合作总任务执行的第一个年度的前半年内完成，若条件允许，应当在正式合作研究开始之前完成；
Finalizing this task within the first half of the year when Chinese-American joint development project come into executive. Better to finalize it before the cooperation officially started.

（2） 也在中美合作总任务执行的第一个年度的前半年内完成，若条件允许，应当在正式合作研究开始之前完成；
Finalizing this task within the first half of the year when Chinese-American joint development project come into executive. Better to finalize it before the cooperation officially started.

（3） 贯穿中美合作总任务执行的全过程。
Throughout the whole process of China-America cooperation.

	TASKs	2011				2012				2013				2014			
		Q1	Q2	Q3	Q4	Q1	Q2	Q3	Q4	Q1	Q2	Q3	Q4	Q1	Q2	Q3	Q4
1	Subtask 1																
2	Subtask 2																

3	Subtask 3	

6. 合作基础与合作能力

Personnel, Facility and Equipment

中方知识产权项目组有丰富的承担完成各类知识产权研究的经验，先后承担完成过来自世界知识产权组织国际合作项目、多项中国自然科学基金委员会资助知识产权项目、中国多个省部委委托、多个大型企业委托的知识产权项目、以及中德合作研究项目的知识产权子任务等。

We Chinese IP research group has rich experiences in accomplishing different kinds of IP research, which has undertaken and completed various research projects, including international cooperation from the World Intellectual Property Organization, a number of intellectual property projects funded by the Natural Science Foundation of China, the intellectual property projects commissioned by several Chinese provinces and Chinese ministries, the projects commissioned by the large enterprises, and the intellectual property sub-tasks in the Sino-German cooperation research project, and so on.

7. 预计成果

Deliverable/ Output

（1） 清晰界定中美双方及各个合作研究参与单位在合作开始前的知识产权；
Clearly defined the background IP owned by both American and Chinese partners and other collaboration partners before kicking off the project.

（2） 合理签署项目合作的知识产权协议和保密协议，从而鼓励各方数据和其他信息共享，推进合作研究的顺利开展；
Signing intellectual property agreement to define the ownership and implementation method, and encouraging all collaboration parties to share data and information in order to promote the collaboration to run smoothly.

（3） 引导合作研究向正确的方向开展、避免重复研究开发和无效的投入；
Leading the joint development to the right direction and avoid research repetition and ineffective devotion.

（4） 及时合理地将合作研究开发项目的成果及时申请专利保护、登记软件著作权保护；将适于作为技术秘密保护的技术成果做好保密管理，获得竞争优势，并规划有效地利用所取得的知识产权；
Patenting the research results of joint development project timely, effectively and rationally, registering computer software copyright, and conducting confidential information management for technology know-how, in order to gain competitive advantage and well plan the protection strategy of arising IP.

（5） 将系列研究成果在申请获得专利保护的前提下、并积极申请成为行业的技术标准，为研究成果在国际范围的产业化运用奠定基础。
Planning and applying for technology standards on condition that the research results have already been well patented, in order to build up a good foundation for future commercialization of arising in the world wide scope.

附录 2 / Annex 2

TECHNOLOGY MANAGEMENT PLAN
(Regarding the exploitation of Intellectual Property Rights)
for the Clean Energy Research Center Advanced Coal Technology Consortium (ACTC)
中美清洁能源研究中心清洁煤技术联盟（ACTC）
关于知识产权利用的
技术管理计划

I. PREAMBLE
一、前言

1. The Chinese members of the ACTC (hereinafter, China ACTC) and the United States of America members of the ACTC (hereinafter, U.S. ACTC) agree to the following Technology Management Plan (TMP) regarding the exploitation of intellectual property rights pursuant to paragraph II.B.2.(d) of Annex I - Intellectual Property (hereinafter "IP Annex") of the Protocol for Cooperation on a Clean Energy Research Center (hereinafter "CERC Protocol"), signed on the 17th day of November, 2009, by the Department of Energy (DOE) of the United States of America, the Ministry of Science and Technology (MOST) and the National Energy Administration (NEA) of the People's Republic of China, (hereinafter "Signatories to the CERC Protocol").

1. 清洁煤技术联盟中方成员（以下简称"中方 ACTC"）和清洁煤技术联盟美方成员（以下简称"美方 ACTC"）根据美利坚合众国能源局（DOE），中华人民共和国科学技术部（MOST）和国家能源局（NEA）（以下简称"CERC 议定书缔约双方"），于 2009 年 11 月 17 日签署的关于中美清洁能源联合研究中心合作议定书（简称"CERC 议定书"）以及附件 I 知识产权（简称"IP 附件"）第二节第 2 条第 2 款第 4 项就以下技术管理计划（TMP）关于利用知识产权的条款达成共识。

2. This TMP is applicable to all CERC-ACTC Cooperative Activities undertaken pursuant to the CERC Protocol and its IP Annex, except as otherwise agreed to by the Signatories to the CERC Protocol or their respective designees in writing.

2. 本计划适用于根据 CERC 议定书以及 IP 附件开展的所有 CERC-ACTC 合作活动，但 CERC 议定书缔约双方或其书面指定的各自代表机构另有专门协议除外。

3. This TMP considers the exploitation of intellectual property rights as described in the CERC Protocol and paragraph II.B.2.(b) and (c) of IP Annex. The IP rights of visiting researchers set forth in paragraph II.B.(1) of the IP Annex are hereby superseded, notwithstanding paragraph II.B.(1). This TMP also considers the relative contributions of the Signatories to the CERC Protocol and their Participants to the particular Jointly-Funded Research Project, the benefits of licensing by territory, or for fields of use, and other factors deemed appropriate for the particular technology which is the subject matter of the Jointly-Funded Research Project.

3. 本计划考虑了在 CERC 议定书及 IP 附件第二节第 2 条第 2 款第 2 项和第 3 项所述的知识产权的利用问题。尽管有 IP 附件之第二节第 2 条第 1 款之规定，附件中第二节第 2 条对来访研究人员利用知识产权的规定在此被取代。本计划还考虑到 CERC 议定书缔约双方及其参与者对专项联合资助研究项目所做的相应贡献、根据区域或者根据应用领域授予许可的益

处，以及被视为适合于作为联合资助研究项目主旨的特定技术的其它因素。

4. This TMP complements, supplements, and implements the IP Annex, considering intellectual property management and information sharing, and is subject to and governed by the CERC Protocol, its IP Annex and all CERC governing documents, including applicable contractual IP provisions of the Signatories to the CERC Protocol.

4. 本计划旨在完善、补充和贯彻 IP 附件中有关知识产权管理和信息共享等未尽事宜，并以遵守 CERC 议定书、其 IP 附件及所有 CERC 管理文件，包括有关 CERC 议定书缔约双方签署的知识产权合同的管辖。

5. The purpose of this TMP is to facilitate joint research and development on clean energy by teams of scientists and engineers from the United States and China by specifying intellectual property rights in greater detail than the Protocol's IP Annex; and encourage information sharing and technical communication in this project to the utmost degree between the Signatories to the CERC Protocol.

5. 本计划宗旨是通过促进中美双方科学家和工程师团队在清洁能源领域的联合研究和开发，在知识产权方面做出比议定书之 IP 附件更具体化的内容，并最大程度地鼓励 CERC 议定书缔约双方在该项目合作领域内的技术交流和信息共享。

6. The CHINA ACTC and U.S. ACTC have agreed that each Cooperative Activity shall be described in a work plan that includes:

(1) A Description of the Research Objective;
(2) Background and Technical Approach;
(3) Task Statements;
(4) Roles and Responsibilities of Leads, Performers, Partners and Other Participants;
(5) Equipment, Resources, Sites, Facilities, Materials to be Supplied;
(6) Work Schedule, with Interim Milestones (or Decision Points);
(7) Deliverables and Dates;
(8) Budgets, Funding or Estimated Costs (indicating Level of Effort, or Person - Hours Equivalents);
(9) Reporting Requirements (Interim Reports, Final); and
(10) Technical Management Plan (TMP)

This TMP satisfies point 10, thereof.

6. 中方 ACTC 和美方 ACTC 已经同意对于每一合作活动应在工作计划中予以说明，包括：

(1) 研究目标说明；
(2) 背景与技术方法；
(3) 任务说明；
(4) 牵头人、执行人、合伙人及其他参与者的职能和责任；
(5) 拟提供的设备、资源、场地、设施、材料；
(6) 工作时间表及期间的节点（或决定点）；
(7) 可交付成果及日期；
(8) 预算、资金或估算成本（包括人员投入水平或对应的工时）；
(9) 报告要求（期间的报告及最终报告）；及
(10) 技术管理计划（TMP）

本技术管理计划因此满足第（10）项的要求。

II. DEFINITIONS

二、定义

1. “Intellectual Property” shall have the meaning found in Article 2 of the Convention Establishing the World Intellectual Property Organization, Signed at Stockholm on July 14, 1967 and as amended on September 28, 1979, and may include other subject matter as agreed to by the Signatories to the CERC Protocol.

1. “知识产权”应具有 1967 年 7 月 14 日在斯德哥尔摩缔结并于 1979 年 9 月 28 日修订的《建立世界知识产权组织公约》第二条所指含义，并可以包括 CERC 议定书缔约双方同意的其它标的。

2. “Background Intellectual Property,” as used in this TMP, shall mean intellectual property created or invented outside the scope of the Joint Work Plan for Research on Clean Coal Including Carbon Capture and Storage (hereinafter ACTC Joint Work Plan), dated 18 January 2011.

2. 本计划中“背景知识产权”是指在 2011 年 1 月 18 日对清洁煤包括碳捕捉及储存的联合工作计划 (以下简称 ACTC 联合工作计划) 范围以外创造或发明的知识产权。

3. “Project Intellectual Property” shall mean Intellectual Property created or invented by a Participant in performance of work within the scope of the ACTC Joint Work Plan.

3.“项目知识产权”是指在 ACTC 联合工作计划范围之内从事工作的参与者创造或发明的知识产权。

4. “Cooperative Activities,” as used in this TMP, shall mean any research and development work within the scope of the ACTC Joint Work Plan.

4. 本计划中“合作活动”是指 ACTC 共同工作计划范围之内的任何研究和开发工作。

5. “Jointly-Funded Research Project,” as used in this TMP, shall mean Cooperative Activities whose scope of work/work plan involves Signatories to the CERC Protocol from BOTH countries providing collaborating research performers employed or sponsored by them and/or joint funding (including in-kind contributions) of such scope of work/work plan.

5. 本计划中“共同资助研究项目”是指其工作范围、工作计划涉及中美 CERC 议定书缔约双方及其雇佣或资助合作研究执行者，和/或共同为前述工作范围、工作计划出资（包括实物捐赠）的合作活动。

6. “Participant(s),” as used in this TMP, shall mean an entity or entities performing or providing funding or in-kind support for the performance of any of the research and development work in a particular Cooperative Activity, or administration thereof, within the scope of the ACTC Joint Work Plan agreed upon under the CERC Protocol, and includes, but is not limited to, contractor(s), subcontractor(s), awardee(s), sub-awardee(s), of MOST, NEA or DOE, or any other entity that provides significant funding or in-kind support as herein set forth.

6. 本计划中“参与者”是指执行下列事项或为执行下列事项提供资金或实物支持的主体：根据 CERC 议定书约定的 ACTC 共同工作计划范围内的专项“合作活动”中的任何研究和开发工作或上述工作的管理，而且还包括但不限于，MOST、NEA 或 DOE 的承包商、分包商、中标人、分中标人，或提供大量资金或实物支持的任何其他主体。

III. Ownership of Intellectual Property

三、知识产权的所有权

1. The owner(s) of Background Intellectual Property shall retain all right, title, and interest in their own Background Intellectual Property. The Signatories to the CERC Protocol have

acknowledged that nothing herein shall be construed as requiring such an owner or owners to license, assign or otherwise transfer its Background Intellectual Property, and that any use of Background Intellectual Property authorized by its owner may require an appropriate license to such Background Intellectual Property.

1. 背景知识产权拥有者保留对其拥有的背景知识产权所享有的所有权利、所有权及利益。CERC 议定书缔约双方认为本文中的任何事项均不得解释为要求该权利拥有者许可、转让或以其他方式转移其所享有的背景知识产权，任何经权利享有者授权的背景知识产权的使用都可能要求获得合适的许可证 。

2. Inventorship of Project Intellectual Property will be determined in accordance with respective applicable patent, trademark and copyright law, and any applicable national or state laws and regulations regarding service inventions and confidentiality.

2. 项目知识产权的发明人身份须根据各自国家适用的专利法、商标法和版权法以及关于职务发明和保密的任何适用的全国性或州法律法规予以确定。

3. A Participant or Participants (and/or MOST, NEA or DOE, in accordance with the laws and practices of the territory of such ministry, agency or department) shall retain ownership, in all countries, of Project Intellectual Property created or invented by such Participant(s) (including the right to file a patent application).

3. 一个或多个参与者（和/或 MOST、NEA、DOE，依据其所在地域法律和惯例的相应部委、机构或部门）应当在世界各国保留对其（参与者）所创造或发明的知识产权的所有权（包括专利申请权）。

IV. Management of Intellectual Property and Information Sharing

四、知识产权管理和信息共享

1. Participants in Cooperative Activities may list all relevant intellectual property that they assert as Background IP for the purpose of seeking to distinguish Background Intellectual Property from Project Intellectual Property. Participants in a particular Jointly-Funded Research Project or Cooperative Activity, and contributors of Background Intellectual Property to that Project or Activity, may agree in writing to the scope and nature of the Background Intellectual Property.

1. 合作活动的参与者可列出其宣称为背景知识产权的所有相关知识产权，以便对背景知识产权和项目知识产权加以区分。专项共同资助研究项目或者合作活动的参与者及该项目或活动的背景知识产权提供者可以书面约定背景知识产权的范围和性质。

2. It is the intent of the China ACTC and U.S. ACTC to encourage sharing of data and other information related to the Project Work, both sides shall make regular publically available reports to the respective Signatories to the CERC Protocol (except for that which cannot be disclosed to the public in accordance with applicable national or other laws and regulations regarding secrecy, confidentiality or the need to preserve the novelty of an invention for purposes of patenting), generally describing research data produced, project progress and periodical achievement.

2. 中方 ACTC 和美方 ACTC 意在鼓励共享与项目工作有关的数据和其他信息，双方应定期向各自 CERC 议定书缔约方就项目所产生的研究数据、项目进度和阶段性成果进行概括性汇报并公开（依照各自国家法律法规及其他有关保密条例，以及为保护专利申请新颖性的需要不得公开的除外）。

3. Each, the China ACTC and U.S. ACTC, shall use its best efforts to make available to the other early access to technical reports resulting from such cooperative activities that are not “business-confidential”, prior to such reports becoming publicly available.

3. 中方 ACTC 及美方 ACTC，每一方应尽力使对方能够在公众能够获知之前，尽早获得在

上述合作活动中产生的、非属商业机密的技术报告。

4. For "Jointly-Funded Research Projects," subject to the provisions of the IP Annex, each Signatory to the CERC Protocol, and its Participant(s) as may be necessary, shall have access to, and a free right to use such Intellectual Property created or invented during this cooperative activity, for purposes of execution of the project/work plan for the particular Jointly-Funded Research Project.

4. 就"共同资助研究项目"而言，在遵守 IP 附件规定的前提下，CERC 议定书缔约双方及其参与者（如有必要）为执行专项共同资助研究项目/工作计划，应有权无偿使用此合作活动中创造或发明的知识产权。

5. As appropriate, a Participant may execute a mutually agreeable confidentiality agreement, to protect the confidentiality of Intellectual Property, other business-confidential information, or protected research data.

5. 参与者可视情况签署一份双方同意的，以对知识产权、其他商业机密信息或对研究数据保密的保密协议。

6. In accordance with paragraph III of the IP Annex, for greater clarity, and subject to the IP Annex and this TMP, the Signatories to the CERC Protocol (or their designees) and its Participants may enter into agreements with respect to their business-confidential information, including trade secrets or protected data that restricts access to such information to only certain of the Participants.

6. 根据 IP 附件第三节，为使之更加明晰，在遵守 IP 附件和本计划的前提下，CERC 议定书缔约双方（或其指定机构）及其参与者可就各自的商业机密信息，包括商业秘密或保密数据达成协议，以限定特定参与者接触此类机密信息。

7. Participants may, where appropriate, plan and apply for national and international technology standard on condition that the research results have already been patented.

7. 在研究成果已经获得专利权的前提下，参与者可视情况规划并申报国内和国际技术标准。

V. SHARING AND PROTECTION OF INTERESTS IN INTELLECTUAL PROPERTY RIGHTS

五、知识产权权益的共享与保护

1. Where the domestic law of the territory of each, China ACTC or U.S. ACTC, prohibits the use, disclosure or permitting of others to use or disclose intellectual property or any research data or other information, this TMP supports such law.

1. 如果中方 ACTC 或美方 ACTC 其中一方的国内法规定禁止使用、披露或者允许他人使用或披露知识产权或任何研究数据或其他信息，本计划予以支持。

2. The rights allocation described in this TMP related to the Project Intellectual Property are consistent with the principles of the CERC Protocol, IP Annex and all CERC governing documents.

2. 本计划中所述的有关项目知识产权的权利分配，依据 CERC 议定书、IP 附件及所有 CERC 管理文件中的原则进行。

3. Project Intellectual Property created or invented jointly by employees of and/or those sponsored by Signatories to the CERC Protocol from BOTH territories, shall be jointly owned by the respective Signatories to the CERC Protocol (or their Participant(s) in accordance with the laws and practices of the signatory's territory) and subject to each such owner having an undivided interest in the same.

3. 由中美两国 CERC 议定书缔约双方雇员和/或被资助的人员共同发明或创造的项目知识产权，需由各自 CERC 议定书缔约方（或遵守所在国相应法律和惯例的参与者）共同享有所

有权，且以每一所有方对该知识产权享有不可分割的权益为前提。

4. For “Jointly-Funded Research Projects,” unless otherwise agreed by the China ACTC and the U.S. ACTC—

4. 就“共同资助研究项目”而言，除非中方 ACTC 及美方 ACTC 另有约定—

4.1 An owner or owners from one territory, of Project Intellectual Property arising from such a project (and where necessary, Signatories to the CERC Protocol with an interest in such intellectual property) shall agree to negotiate in good faith terms of a nonexclusive license, to the other territory's Participants in such particular “Jointly-Funded Research Project”, to make, have made, use, sell or otherwise practice such intellectual property. Such licenses shall be subject to negotiation on favorable terms agreeable to the entities that have ownership of such Intellectual Property.

4.1 产生于“共同资助研究项目”的项目知识产权的一国所有权人（并在必要时，对该知识产权享有某种利益的 CERC 议定书缔约方）应同意基于诚信条款来谈判一项普通许可协议，许可另一国的参与者在该项“共同资助研究项目”中制作、委托制作、使用、出售或以其他方式实施该知识产权。此类许可应以对拥有该知识产权的主体有利和可接受的条款为前提。

4.2 The China ACTC and U.S. ACTC hereby agree that any licenses to “Jointly-Funded Research Project” Project Intellectual Property granted to third-parties that are not Participants in the particular “Jointly-Funded Research Project”, shall be non-exclusive and based upon fairly negotiated arms-length commercial terms and compensation which contemplate the commercial benefits of the technology and the investment in the development of the technology, the benefits of licensing by territory, or for fields of use, and other factors deemed appropriate for the particular technology which is the subject of the “Jointly-Funded Research Project.” Unless otherwise required by law (or, consistent with applicable law, otherwise agreed by the owners of the particular Project Intellectual Property), an owner of “Jointly Funded Research Project” Project Intellectual Property shall have no obligation of accounting to the co-owners of such Project Intellectual Property or to the Signatories of the CERC Protocol for any such arms-length licenses to third parties.

4.2 中方 ACTC 和美方 ACTC 特此同意，授予第三方（指在专项“共同资助研究项目”中的非参与者）的“共同资助研究项目”项目知识产权的任何许可应是普通许可，且建立在公平协商的公平商业条款和补偿的基础上，上述条款和补偿应考虑下列因素：技术的商业利益及技术研发投入、根据领土或者根据应用领域授予许可的收益，以及其它被视为适合特定技术的因素，特定技术是联合资助研究项目的主旨。除非法律另有规定（或者，根据相关法律项目知识产权所有权人另有约定），“共同资助研究项目”的项目知识产权一方所有权人无义务就该项授予第三方的公平许可向其他共有所有权人，或 CERC 议定书缔约方做出说明。

5. For “Cooperative Activities” that do not include a “Jointly-Funded Research Project”, unless otherwise agreed by the China ACTC and the U.S. ACTC—

5. 对于不包括“共同资助研究项目”的“合作活动”而言，除非中方 ACTC 及美方 ACTC 另有约定——

5.1 An owner or owners from one territory, of Project Intellectual Property arising from such a project (and where necessary, Signatories to the CERC Protocol with an interest in such intellectual property) shall agree to negotiate in good faith terms of a nonexclusive license to the other territory’s ACTC Participants, for any invention made under such activities that is not a trade secret, for research and development purposes only.

5.1 产生于一个项目的项目知识产权的一国所有权人（并在必要时，对该知识产权享有某种利益的 CERC 议定书缔约方）应同意基于诚信条款就在该等活动中创造的不属于商业机密的任何发明对另一国的 ACTC 参与者，来谈判一项仅可用于研究开发目的普通许可。

5.2 The China ACTC and U.S. ACTC hereby agree that any licenses granted by an owner or owners of Project Intellectual Property to third parties that are not Participants in "Cooperative Activities" shall be nonexclusive and based upon fairly negotiated arms-length commercial terms and compensation which contemplate the commercial benefits of the technology and the investment in the development of the technology, the benefits of licensing by territory, or for fields of use, and other factors deemed appropriate for the particular technology which is the subject of the "Cooperative Activity."

5.2 中方 ACTC 和美方 ACTC 特此同意，拥有项目知识产权的所有权人授予第三方（非"合作活动"参与者）的任何许可应是普通许可，且建立在公平协商的公平商业条款和补偿之上，上述条款和补偿应考虑下列因素：技术的商业利益及技术研发投入、根据领土或者根据应用领域授予许可的收益，以及其它被视为适合特定技术的因素，特定技术是联合资助研究项目的主旨。

6. Subject to the IP Annex, this TMP, and any terms and conditions of MOST, NEA or DOE's allocation with its Participants in accordance with the laws and practices of such Participant's territory, intellectual property rights allocations relating to Cooperative Activities may be established by Participants (or MOST, NEA or DOE, in accordance with the laws and practices of the territory of such ministry, agency or department) in sub-agreements, Project Annexes, or separate agreements among Participants engaged in such Cooperative Activities.

6. 在遵守 IP 附件、本计划以及依据所在国的法律惯例 MOST, NEA 或 DOE 与参与者之间的有关分配的任何条款的前提下，涉及合作活动的知识产权分配，可由参与者 (或 MOST, NEA 或 DOE，及依据其所在地域法律和惯例的相应部委、机构或部门)在相关补充协议、项目附件或参与该等合作活动的参与者另行订立的协议中加以规定。

VI. Dispute Resolution

六、争议解决

1. Disputes concerning intellectual property arising under this Protocol shall be resolved through discussions between the affected Signatories to the CERC Protocol and/or Participants or, if such signatories or Participants are unable to resolve the dispute through such discussions, upon mutual agreement of the Signatories to the CERC Protocol or their designees, a dispute shall be submitted to an arbitral tribunal agreed by the Signatories or Participants for binding arbitration in accordance with the applicable rules of international law. Unless the Signatories to the CERC Protocol or their designees agree otherwise in writing, the arbitration rules of the United Nations Commission on International Trade Law (UNCITRAL) shall govern.

1. 本计划下所产生的知识产权争议应当由受影响的 CERC 议定书缔约双方和/或参与者通过协商解决，如果上述缔约方或参与者无法通过协商解决争议，应将争议提交经 CERE 议定书缔约双方或其指定机构同意的仲裁庭根据适用的国际法规则进行有约束力的仲裁。除 CERC 议定书双方或者其指定机构另有书面协议外，仲裁适用联合国国际贸易法委员会仲裁规则。

2. DONE at Morgantown, WV USA, in triplicate, on the 19th day of August, 2011, in the English and Chinese language, both texts being equally authentic. Except as otherwise provided in the CERC Protocol and the IP Annex, any questions concerning the interpretation or application of

this Technology Management Plan shall be resolved by consultation between the China ACTC and the U.S. ACTC and the respective Signatories to the CERC Protocol.

2. 本技术管理计划于 2011 年 08 月 19 日在 美国西弗吉尼亚州摩根顿 签署，一式叁份，每份均用中文和英文写成，两种文本具有同等效力。除非 CERC 议定书和 IP 附件另有规定，任何有关本计划之解释或应用的问题应当由中方 ACTC、美方 ACTC 及双方各自的 CERC 议定书缔约方协商解决。

For the U.S. ACTC	For the CHINA ACTC
美方 ACTC 代表	中方 ACTC 代表
Prof. Dr. Jerald J. Fletcher	Prof. Dr. ZHENG Chuguang
Jerald J. Fletcher 博士（教授）	郑楚光博士（教授）